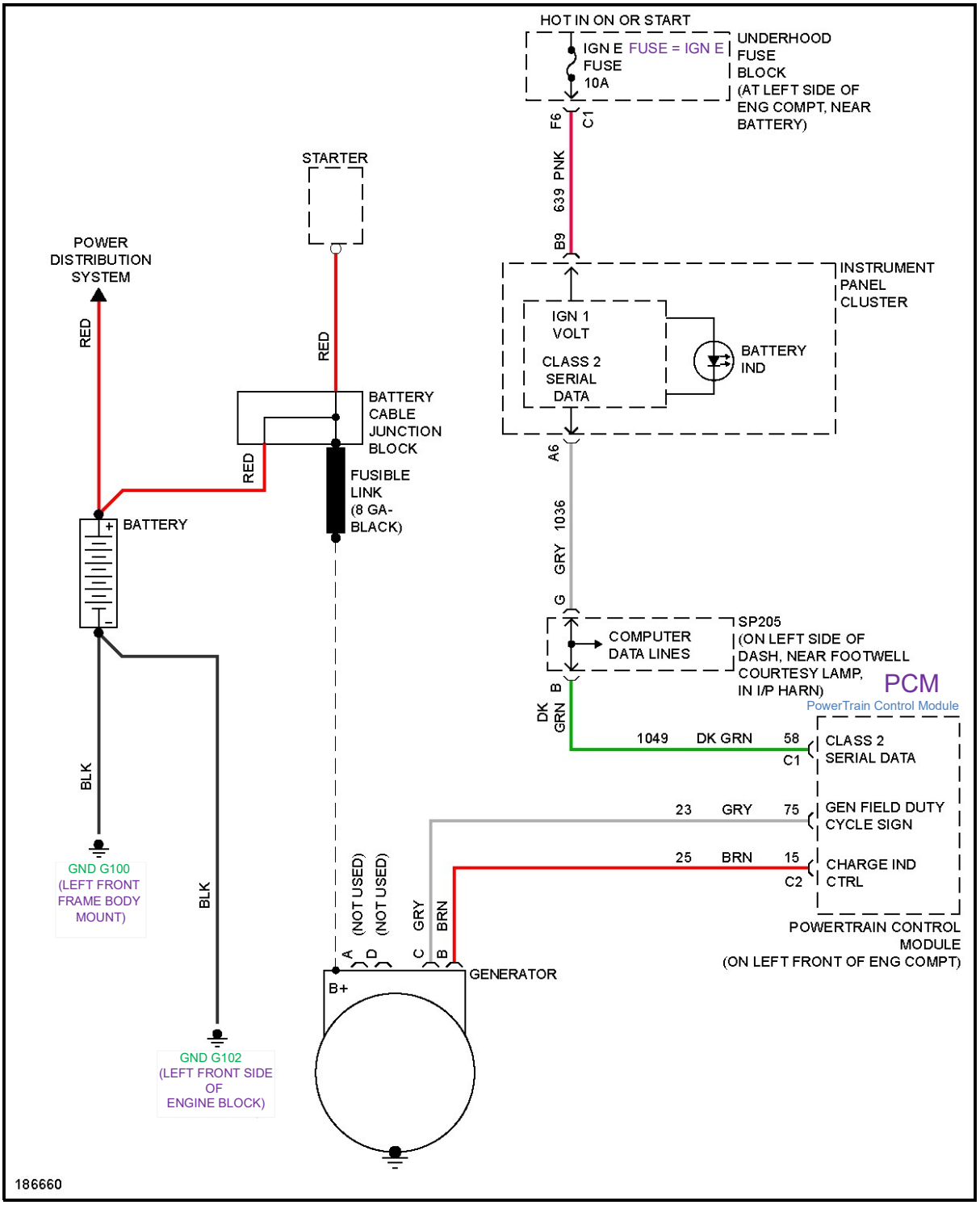
HOT IN ON OR START
IGN E FUSE = IGN E
FUSE
10A
UNDERHOOD
FUSE
BLOCK
(AT LEFT SIDE OF
ENG COMPT, NEAR
BATTERY)
F6
C1
639 PNK
B9
STARTER
POWER
DISTRIBUTION
SYSTEM
RED
RED
INSTRUMENT
PANEL
CLUSTER
IGN 1
VOLT
CLASS 2
SERIAL
DATA
BATTERY
IND
BATTERY
CABLE
JUNCTION
BLOCK
RED
FUSIBLE
LINK
(8 GA-
BLACK)
A6
1036
GRY
G
BATTERY
COMPUTER
DATA LINES
SP205
(ON LEFT SIDE OF
DASH, NEAR FOOTWELL
COURTESY LAMP,
IN I/P HARN)
PCM
PowerTrain Control Module
B
DK
GRN
1049
DK GRN
58
C1
CLASS 2
SERIAL DATA
23
GRY
75
GEN FIELD DUTY
CYCLE SIGN
25
BRN
15
C2
CHARGE IND
CTRL
BLK
GND G100
(LEFT FRONT
FRAME BODY
MOUNT)
BLK
(NOT USED)
(NOT USED)
GRY
BRN
A
D
C
B
GENERATOR
B+
POWERTRAIN CONTROL
MODULE
(ON LEFT FRONT OF ENG COMPT)
GND G102
(LEFT FRONT SIDE
OF
ENGINE BLOCK)
186660

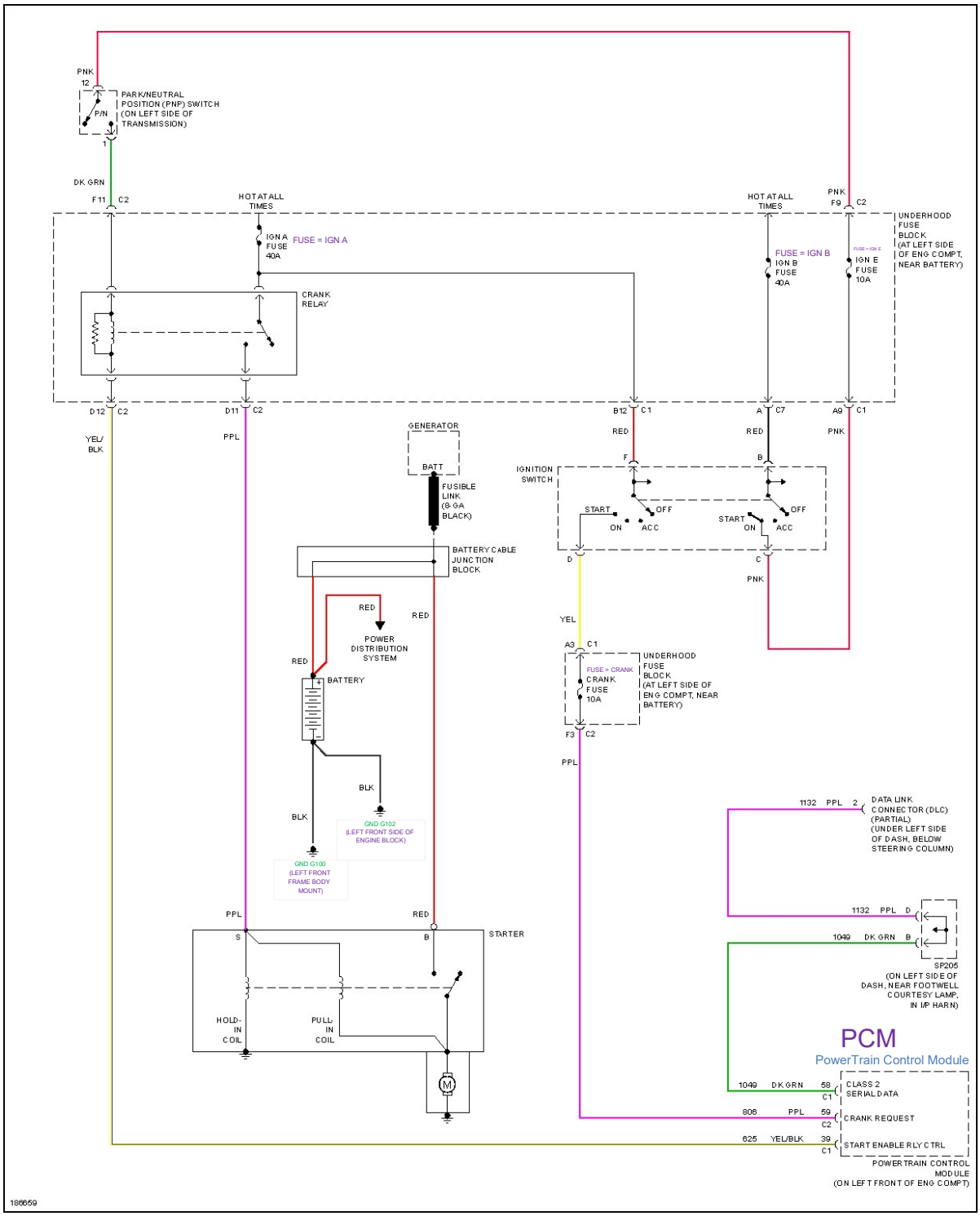
PNK
12
PARK/NEUTRAL POSITION (PNP) SWITCH (ON LEFT SIDE OF TRANSMISSION)
P/N
1
DK GRN
F11
C2
HOT AT ALL TIMES
IGN A FUSE 40A
FUSE = IGN A
CRANK RELAY
HOT AT ALL TIMES
PNK
F9
C2
FUSE = IGN B
IGN B FUSE 40A
IGN E FUSE 10A
UNDERHOOD FUSE BLOCK (AT LEFT SIDE OF ENG COMPT, NEAR BATTERY)
D12
C2
D11
C2
B12
C1
A
C7
A9
C1
YEL/BLK
PPL
RED
RED
PNK
GENERATOR
BATT
FUSIBLE LINK (8-GA BLACK)
IGNITION SWITCH
START
ON
ACC
OFF
START
ON
ACC
OFF
F
B
D
C
PNK
BATTERY CABLE JUNCTION BLOCK
RED
RED
POWER DISTRIBUTION SYSTEM
RED
BATTERY
YEL
A3
C1
FUSE = CRANK
CRANK FUSE 10A
UNDERHOOD FUSE BLOCK (AT LEFT SIDE OF ENG COMPT, NEAR BATTERY)
F3
C2
PPL
BLK
BLK
GND G102 (LEFT FRONT SIDE OF ENGINE BLOCK)
GND G100 (LEFT FRONT FRAME BODY MOUNT)
1132 PPL 2
DATA LINK CONNECTOR (DLC) (PARTIAL) (UNDER LEFT SIDE OF DASH, BELOW STEERING COLUMN)
1132 PPL D
1049 DK GRN B
SP205 (ON LEFT SIDE OF DASH, NEAR FOOTWELL COURTESY LAMP, IN I/P HARN)
PPL
S
RED
B
STARTER
HOLD-IN COIL
PULL-IN COIL
M
PCM
PowerTrain Control Module
1049 DK GRN 58 C1
CLASS 2 SERIAL DATA
806 PPL 59 C2
CRANK REQUEST
625 YEL/BLK 39 C1
START ENABLE RLY CTRL
POWER TRAIN CONTROL MODULE (ON LEFT FRONT OF ENG COMPT)
186659