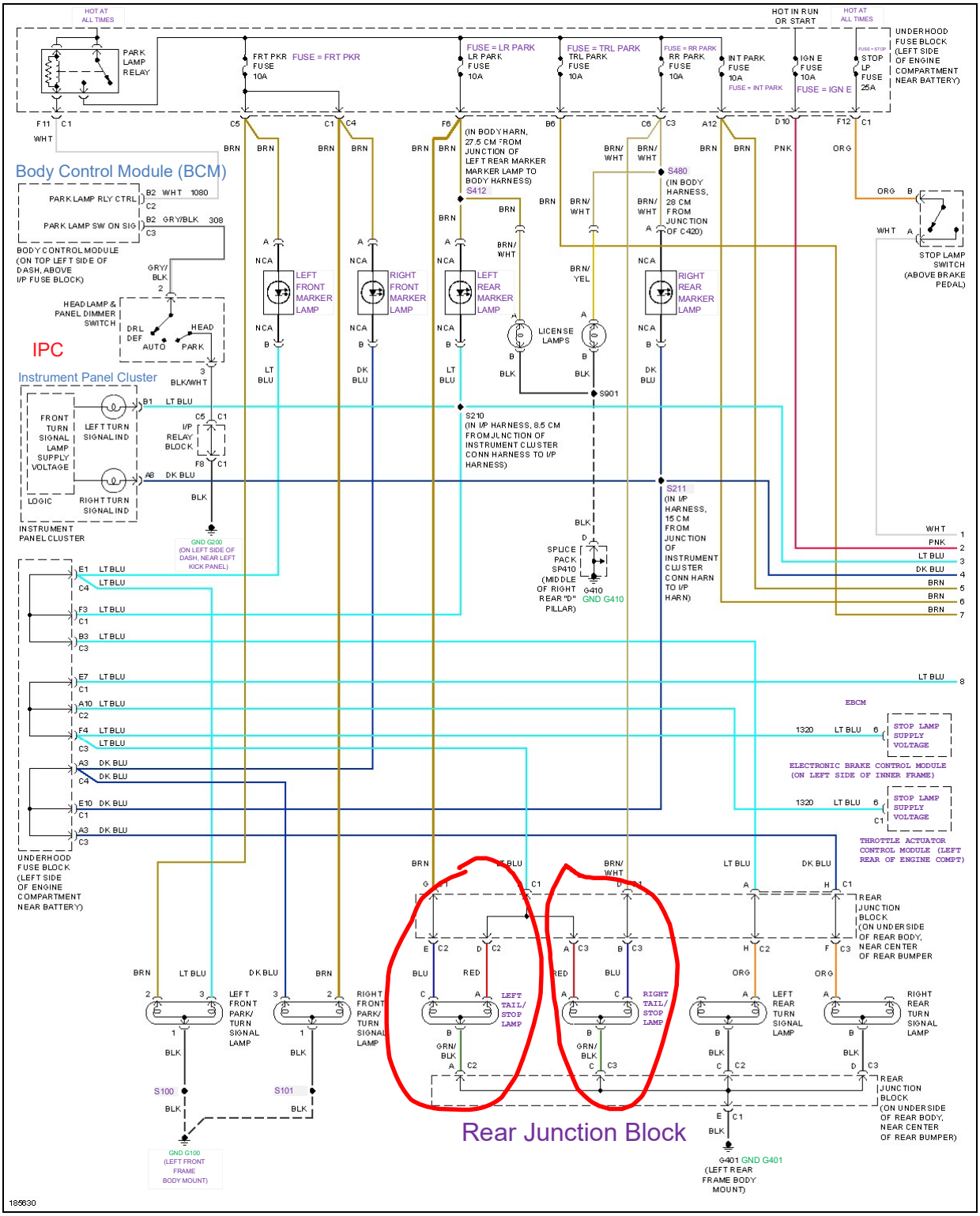
Body Control Module (BCM)
IPC
Instrument Panel Cluster
Rear Junction Block
PARK LAMP RELAY
FRT PKR FUSE 10A
FUSE = FRT PKR
FUSE = LR PARK
LR PARK FUSE 10A
FUSE = TRL PARK
TRL PARK FUSE 10A
FUSE = RR PARK
RR PARK FUSE 10A
INT PARK FUSE 10A
FUSE = INT PARK
IGN E FUSE 10A
FUSE = IGN E
STOP LP FUSE 25A
UNDERHOOD FUSE BLOCK (LEFT SIDE OF ENGINE COMPARTMENT NEAR BATTERY)
HOT AT ALL TIMES
HOT IN RUN OR START
PARK LAMP RLY CTRL
PARK LAMP SW ON SIG
BODY CONTROL MODULE (ON TOP LEFT SIDE OF DASH, ABOVE I/P FUSE BLOCK)
HEAD LAMP & PANEL DIMMER SWITCH
DRL DEF
AUTO
HEAD
PARK
LEFT FRONT MARKER LAMP
RIGHT FRONT MARKER LAMP
LEFT REAR MARKER LAMP
RIGHT REAR MARKER LAMP
LICENSE LAMPS
STOP LAMP SWITCH (ABOVE BRAKE PEDAL)
FRONT TURN SIGNAL LAMP SUPPLY VOLTAGE
LEFT TURN SIGNAL IND
RIGHT TURN SIGNAL IND
LOGIC
INSTRUMENT PANEL CLUSTER
I/P RELAY BLOCK
GND G200 (ON LEFT SIDE OF DASH, NEAR LEFT KICK PANEL)
S480 (IN BODY HARNESS, 28 CM FROM JUNCTION OF C420)
S412
S210 (IN I/P HARNESS, 8.5 CM FROM JUNCTION OF INSTRUMENT CLUSTER CONN HARNESS TO I/P HARNESS)
S211 (IN I/P HARNESS, 15 CM FROM JUNCTION OF INSTRUMENT CLUSTER CONN HARN TO I/P HARN)
S901
SPLICE PACK SP410 (MIDDLE OF RIGHT REAR "D" PILLAR)
G410 GND G410
EBCM
STOP LAMP SUPPLY VOLTAGE
ELECTRONIC BRAKE CONTROL MODULE (ON LEFT SIDE OF INNER FRAME)
THROTTLE ACTUATOR CONTROL MODULE (LEFT REAR OF ENGINE COMPT)
REAR JUNCTION BLOCK (ON UNDERSIDE OF REAR BODY, NEAR CENTER OF REAR BUMPER)
LEFT FRONT PARK/ TURN SIGNAL LAMP
RIGHT FRONT PARK/ TURN SIGNAL LAMP
LEFT TAIL/ STOP LAMP
RIGHT TAIL/ STOP LAMP
LEFT REAR TURN SIGNAL LAMP
RIGHT REAR TURN SIGNAL LAMP
S100
S101
GND G100 (LEFT FRONT FRAME BODY MOUNT)
G401 GND G401 (LEFT REAR FRAME BODY MOUNT)
185830

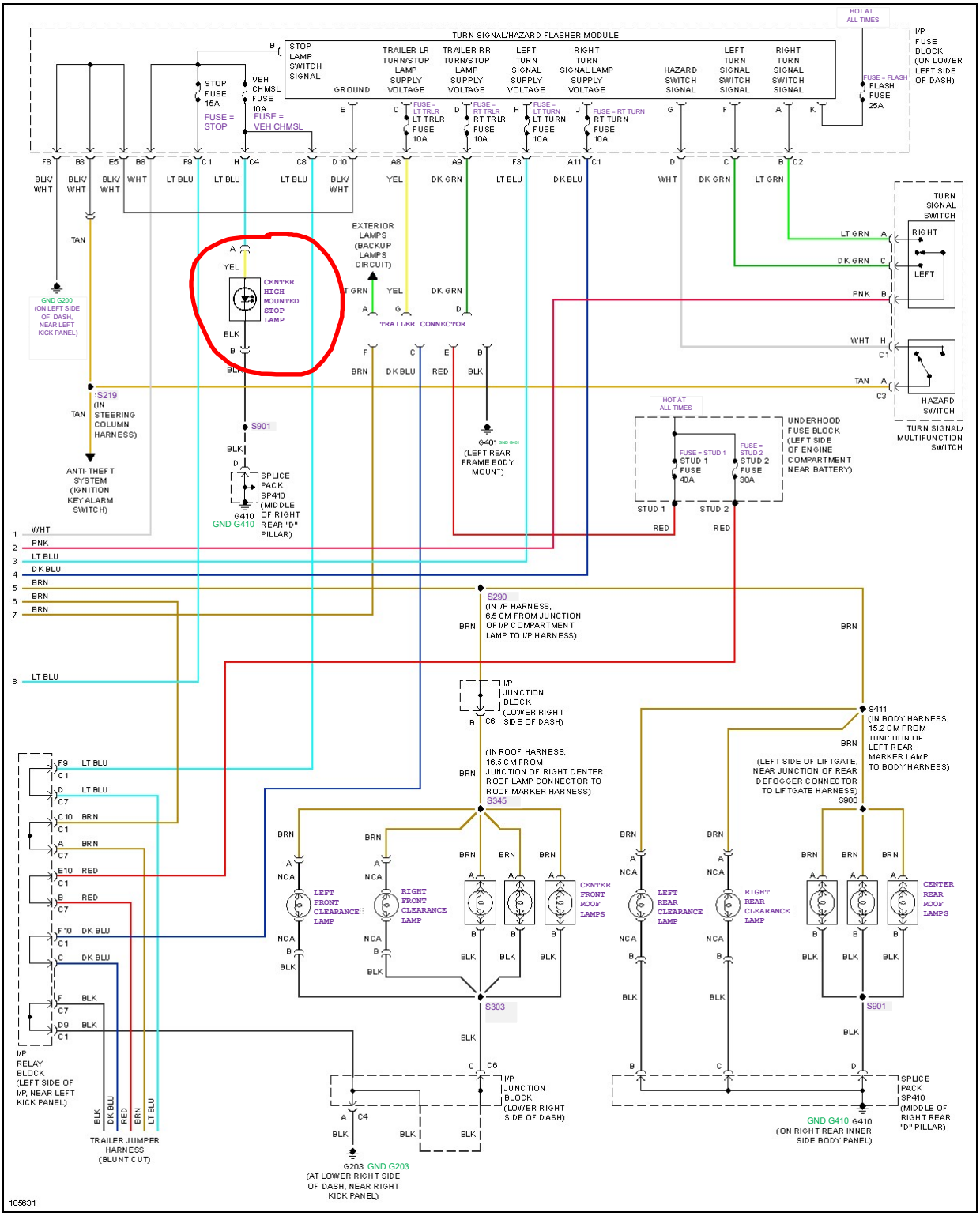
TURN SIGNAL/HAZARD FLASHER MODULE
STOP LAMP SWITCH SIGNAL
TRAILER LR TURN/STOP LAMP SUPPLY VOLTAGE
TRAILER RR TURN/STOP LAMP SUPPLY VOLTAGE
LEFT TURN SIGNAL SUPPLY VOLTAGE
RIGHT TURN SIGNAL LAMP SUPPLY VOLTAGE
HAZARD SWITCH SIGNAL
LEFT TURN SIGNAL SWITCH SIGNAL
RIGHT TURN SIGNAL SWITCH SIGNAL
GROUND
HOT AT ALL TIMES
I/P FUSE BLOCK (ON LOWER LEFT SIDE OF DASH)
FUSE = FLASH
FLASH FUSE 25A
STOP FUSE 15A
FUSE = STOP
VEH CHMSL FUSE 10A
FUSE = VEH CHMSL
FUSE = LT TRLR
LT TRLR FUSE 10A
FUSE = RT TRLR
RT TRLR FUSE 10A
FUSE = LT TURN
LT TURN FUSE 10A
FUSE = RT TURN
RT TURN FUSE 10A
TURN SIGNAL SWITCH
RIGHT
LEFT
HAZARD SWITCH
TURN SIGNAL/ MULTIFUNCTION SWITCH
EXTERIOR LAMPS (BACKUP LAMPS CIRCUIT)
CENTER HIGH MOUNTED STOP LAMP
TRAILER CONNECTOR
GND G200 (ON LEFT SIDE OF DASH, NEAR LEFT KICK PANEL)
S219 (IN STEERING COLUMN HARNESS)
ANTI-THEFT SYSTEM (IGNITION KEY ALARM SWITCH)
S901
SPLICE PACK SP410 (MIDDLE OF RIGHT REAR "D" PILLAR)
G410 GND G410
G401 GND G401 (LEFT REAR FRAME BODY MOUNT)
UNDERHOOD FUSE BLOCK (LEFT SIDE OF ENGINE COMPARTMENT NEAR BATTERY)
FUSE = STUD 1
STUD 1 FUSE 40A
FUSE = STUD 2
STUD 2 FUSE 30A
STUD 1
STUD 2
S290 (IN I/P HARNESS, 6.5 CM FROM JUNCTION OF I/P COMPARTMENT LAMP TO I/P HARNESS)
I/P JUNCTION BLOCK (LOWER RIGHT SIDE OF DASH)
(IN ROOF HARNESS, 16.5 CM FROM JUNCTION OF RIGHT CENTER ROOF LAMP CONNECTOR TO ROOF MARKER HARNESS)
S345
S411 (IN BODY HARNESS, 15.2 CM FROM JUNCTION OF LEFT REAR MARKER LAMP TO BODY HARNESS)
(LEFT SIDE OF LIFTGATE, NEAR JUNCTION OF REAR DEFOGGER CONNECTOR TO LIFTGATE HARNESS)
S900
LEFT FRONT CLEARANCE LAMP
RIGHT FRONT CLEARANCE LAMP
CENTER FRONT ROOF LAMPS
LEFT REAR CLEARANCE LAMP
RIGHT REAR CLEARANCE LAMP
CENTER REAR ROOF LAMPS
S303
I/P RELAY BLOCK (LEFT SIDE OF I/P, NEAR LEFT KICK PANEL)
TRAILER JUMPER HARNESS (BLUNT CUT)
G203 GND G203 (AT LOWER RIGHT SIDE OF DASH, NEAR RIGHT KICK PANEL)
SPLICE PACK SP410 (MIDDLE OF RIGHT REAR "D" PILLAR)
GND G410 G410 (ON RIGHT REAR INNER SIDE BODY PANEL)
185831