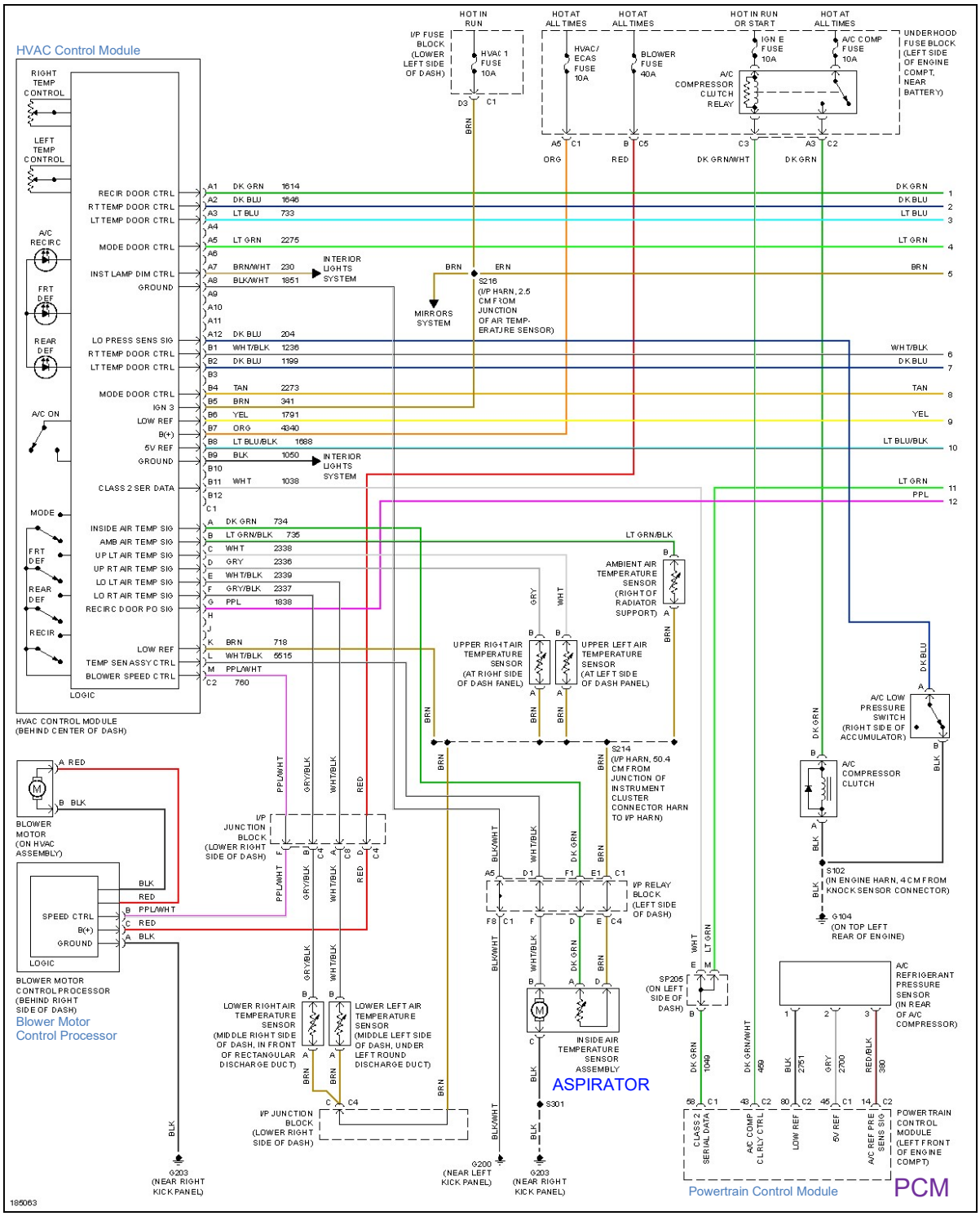
HVAC Control Module
RIGHT TEMP CONTROL
LEFT TEMP CONTROL
A/C RECIRC
FRT DEF
REAR DEF
A/C ON
MODE
FRT DEF
REAR DEF
RECIR
RECIR DOOR CTRL
RT TEMP DOOR CTRL
LT TEMP DOOR CTRL
MODE DOOR CTRL
INST LAMP DIM CTRL
GROUND
LO PRESS SENS SIG
RT TEMP DOOR CTRL
LT TEMP DOOR CTRL
MODE DOOR CTRL
IGN 3
LOW REF
B(+)
5V REF
GROUND
CLASS 2 SER DATA
INSIDE AIR TEMP SIG
AMB AIR TEMP SIG
UP LT AIR TEMP SIG
UP RT AIR TEMP SIG
LO LT AIR TEMP SIG
LO RT AIR TEMP SIG
RECIRC DOOR PO SIG
LOW REF
TEMP SEN ASSY CTRL
BLOWER SPEED CTRL
LOGIC
HVAC CONTROL MODULE (BEHIND CENTER OF DASH)
A1 DK GRN 1614
A2 DK BLU 1646
A3 LT BLU 733
A5 LT GRN 2275
A7 BRN/WHT 230
A8 BLK/WHT 1851
A12 DK BLU 204
B1 WHT/BLK 1236
B2 DK BLU 1199
B4 TAN 2273
B5 BRN 341
B6 YEL 1791
B7 ORG 4340
B8 LT BLU/BLK 1688
B9 BLK 1050
B11 WHT 1038
A DK GRN 734
B LT GRN/BLK 735
C WHT 2338
D GRY 2336
E WHT/BLK 2339
F GRY/BLK 2337
G PPL 1838
K BRN 718
L WHT/BLK 5515
M PPL/WHT
C2 760
INTERIOR LIGHTS SYSTEM
INTERIOR LIGHTS SYSTEM
MIRRORS SYSTEM
HOT IN RUN
HOT AT ALL TIMES
HOT AT ALL TIMES
HOT IN RUN OR START
HOT AT ALL TIMES
I/P FUSE BLOCK (LOWER LEFT SIDE OF DASH)
HVAC 1 FUSE 10A
HVAC/ ECAS FUSE 10A
BLOWER FUSE 40A
IGN E FUSE 10A
A/C COMP FUSE 10A
A/C COMPRESSOR CLUTCH RELAY
UNDERHOOD FUSE BLOCK (LEFT SIDE OF ENGINE COMPT, NEAR BATTERY)
ORG
RED
DK GRN/WHT
DK GRN
S216 (I/P HARN, 2.5 CM FROM JUNCTION OF AIR TEMP-ERATURE SENSOR)
AMBIENT AIR TEMPERATURE SENSOR (RIGHT OF RADIATOR SUPPORT)
UPPER RIGHT AIR TEMPERATURE SENSOR (AT RIGHT SIDE OF DASH PANEL)
UPPER LEFT AIR TEMPERATURE SENSOR (AT LEFT SIDE OF DASH PANEL)
S214 (I/P HARN, 50.4 CM FROM JUNCTION OF INSTRUMENT CLUSTER CONNECTOR HARN TO I/P HARN)
A/C LOW PRESSURE SWITCH (RIGHT SIDE OF ACCUMULATOR)
A/C COMPRESSOR CLUTCH
S102 (IN ENGINE HARN, 4 CM FROM KNOCK SENSOR CONNECTOR)
G104 (ON TOP LEFT REAR OF ENGINE)
BLOWER MOTOR (ON HVAC ASSEMBLY)
I/P JUNCTION BLOCK (LOWER RIGHT SIDE OF DASH)
I/P RELAY BLOCK (LEFT SIDE OF DASH)
SP205 (ON LEFT SIDE OF DASH)
A/C REFRIGERANT PRESSURE SENSOR (IN REAR OF A/C COMPRESSOR)
SPEED CTRL
B(+)
GROUND
LOGIC
BLOWER MOTOR CONTROL PROCESSOR (BEHIND RIGHT SIDE OF DASH)
Blower Motor Control Processor
LOWER RIGHT AIR TEMPERATURE SENSOR (MIDDLE RIGHT SIDE OF DASH, IN FRONT OF RECTANGULAR DISCHARGE DUCT)
LOWER LEFT AIR TEMPERATURE SENSOR (MIDDLE LEFT SIDE OF DASH, UNDER LEFT ROUND DISCHARGE DUCT)
INSIDE AIR TEMPERATURE SENSOR ASSEMBLY
ASPIRATOR
S301
I/P JUNCTION BLOCK (LOWER RIGHT SIDE OF DASH)
G203 (NEAR RIGHT KICK PANEL)
G200 (NEAR LEFT KICK PANEL)
G203 (NEAR RIGHT KICK PANEL)
CLASS 2 SERIAL DATA
A/C COMP CLRLY CTRL
LOW REF
5V REF
A/C REF PRE SENS SIG
POWERTRAIN CONTROL MODULE (LEFT FRONT OF ENGINE COMPT)
Powertrain Control Module
PCM
185063

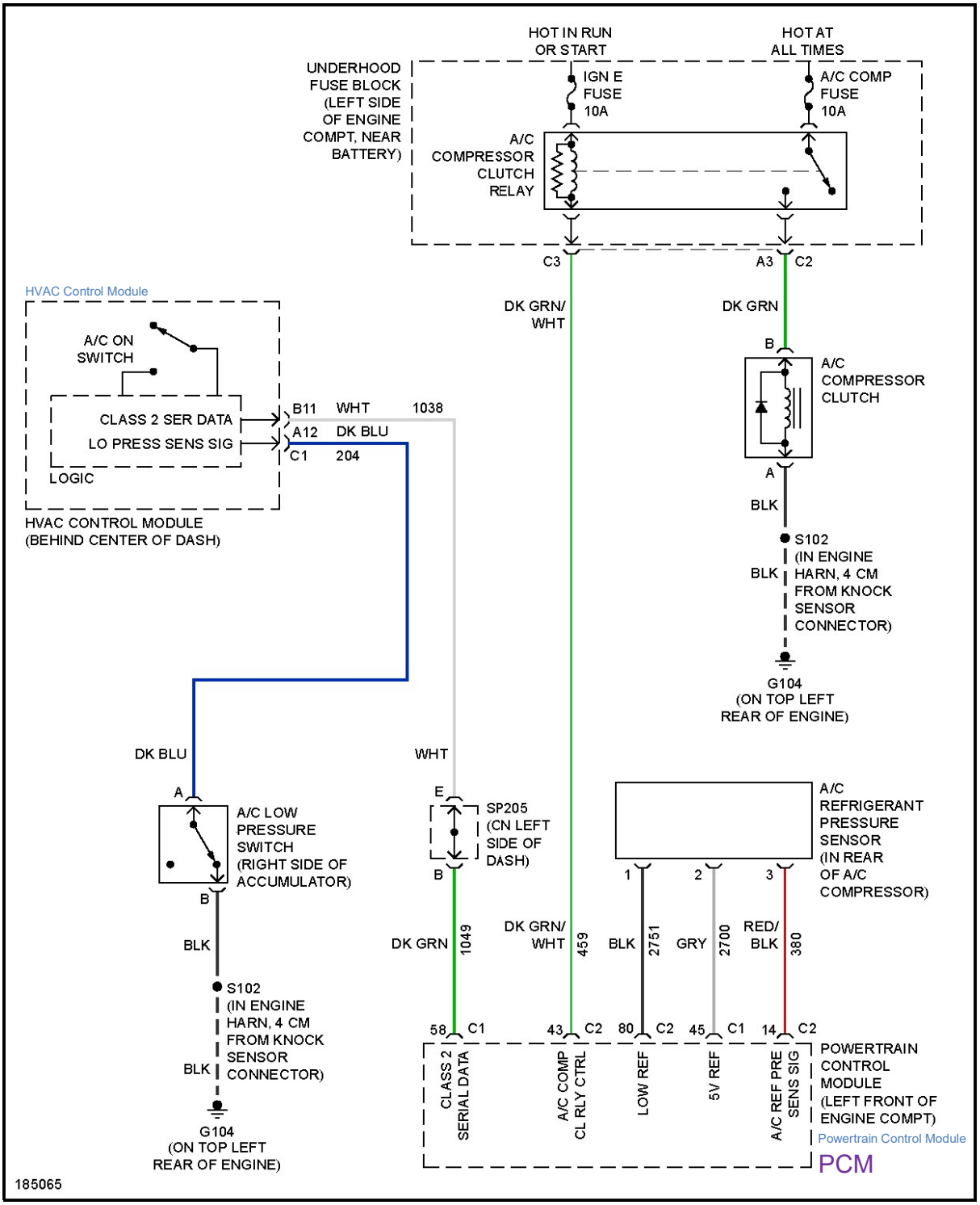
HOT IN RUN OR START
HOT AT ALL TIMES
UNDERHOOD FUSE BLOCK (LEFT SIDE OF ENGINE COMPT, NEAR BATTERY)
IGN E FUSE 10A
A/C COMP FUSE 10A
A/C COMPRESSOR CLUTCH RELAY
C3
A3
C2
HVAC Control Module
A/C ON SWITCH
CLASS 2 SER DATA
LO PRESS SENS SIG
LOGIC
B11 WHT 1038
A12 DK BLU
C1 204
HVAC CONTROL MODULE (BEHIND CENTER OF DASH)
DK GRN/ WHT
DK GRN
B
A/C COMPRESSOR CLUTCH
A
BLK
S102 (IN ENGINE HARN, 4 CM FROM KNOCK SENSOR CONNECTOR)
BLK
G104 (ON TOP LEFT REAR OF ENGINE)
DK BLU
WHT
A
A/C LOW PRESSURE SWITCH (RIGHT SIDE OF ACCUMULATOR)
B
BLK
S102 (IN ENGINE HARN, 4 CM FROM KNOCK SENSOR CONNECTOR)
BLK
G104 (ON TOP LEFT REAR OF ENGINE)
E
SP205 (CN LEFT SIDE OF DASH)
B
DK GRN 1049
A/C REFRIGERANT PRESSURE SENSOR (IN REAR OF A/C COMPRESSOR)
1
2
3
DK GRN/ WHT 459
BLK 2751
GRY 2700
RED/ BLK 380
58 C1
43 C2
80 C2
45 C1
14 C2
CLASS 2 SERIAL DATA
A/C COMP CL RLY CTRL
LOW REF
5V REF
A/C REF PRE SENS SIG
POWERTRAIN CONTROL MODULE (LEFT FRONT OF ENGINE COMPT)
Powertrain Control Module
PCM
185065

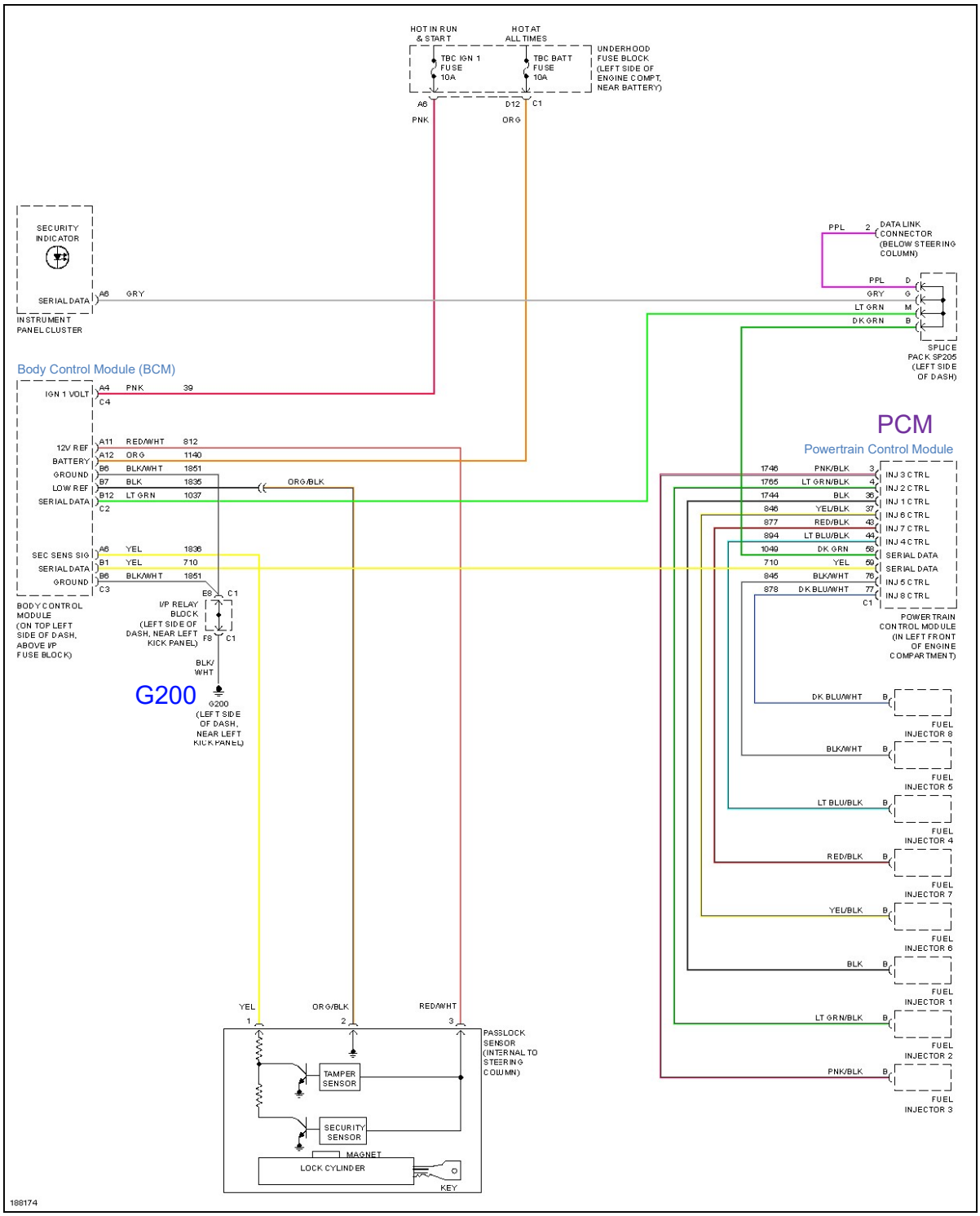
HOT IN RUN & START
HOT AT ALL TIMES
TBC IGN 1 FUSE 10A
TBC BATT FUSE 10A
UNDERHOOD FUSE BLOCK (LEFT SIDE OF ENGINE COMPT, NEAR BATTERY)
A6
D12
C1
PNK
ORG
SECURITY INDICATOR
SERIAL DATA
A6
GRY
INSTRUMENT PANEL CLUSTER
PPL
2
DATA LINK CONNECTOR (BELOW STEERING COLUMN)
PPL
D
GRY
G
LT GRN
M
DK GRN
B
SPLICE PACK SP205 (LEFT SIDE OF DASH)
Body Control Module (BCM)
IGN 1 VOLT
A4
PNK
39
C4
12V REF
A11
RED/WHT
812
A12
ORG
1140
BATTERY
B6
BLK/WHT
1851
GROUND
B7
BLK
1835
LOW REF
B12
LT GRN
1037
SERIAL DATA
C2
ORG/BLK
SEC SENS SIG
A6
YEL
1836
SERIAL DATA
B1
YEL
710
GROUND
B6
BLK/WHT
1851
C3
BODY CONTROL MODULE (ON TOP LEFT SIDE OF DASH, ABOVE I/P FUSE BLOCK)
E8
C1
I/P RELAY BLOCK (LEFT SIDE OF DASH, NEAR LEFT KICK PANEL)
F8
C1
BLK/WHT
G200
G200 (LEFT SIDE OF DASH, NEAR LEFT KICK PANEL)
PCM
Powertrain Control Module
1746
PNK/BLK
3
INJ 3 CTRL
1765
LT GRN/BLK
4
INJ 2 CTRL
1744
BLK
36
INJ 1 CTRL
846
YEL/BLK
37
INJ 6 CTRL
877
RED/BLK
43
INJ 7 CTRL
894
LT BLU/BLK
44
INJ 4 CTRL
1049
DK GRN
56
SERIAL DATA
710
YEL
59
SERIAL DATA
845
BLK/WHT
76
INJ 5 CTRL
878
DK BLU/WHT
77
INJ 8 CTRL
C1
POWER TRAIN CONTROL MODULE (IN LEFT FRONT OF ENGINE COMPARTMENT)
DK BLU/WHT
B
FUEL INJECTOR 8
BLK/WHT
B
FUEL INJECTOR 5
LT BLU/BLK
B
FUEL INJECTOR 4
RED/BLK
B
FUEL INJECTOR 7
YEL/BLK
B
FUEL INJECTOR 6
BLK
B
FUEL INJECTOR 1
LT GRN/BLK
B
FUEL INJECTOR 2
PNK/BLK
B
FUEL INJECTOR 3
YEL
1
ORG/BLK
2
RED/WHT
3
PASSLOCK SENSOR (INTERNAL TO STEERING COLUMN)
TAMPER SENSOR
SECURITY SENSOR
MAGNET
LOCK CYLINDER
KEY
188174

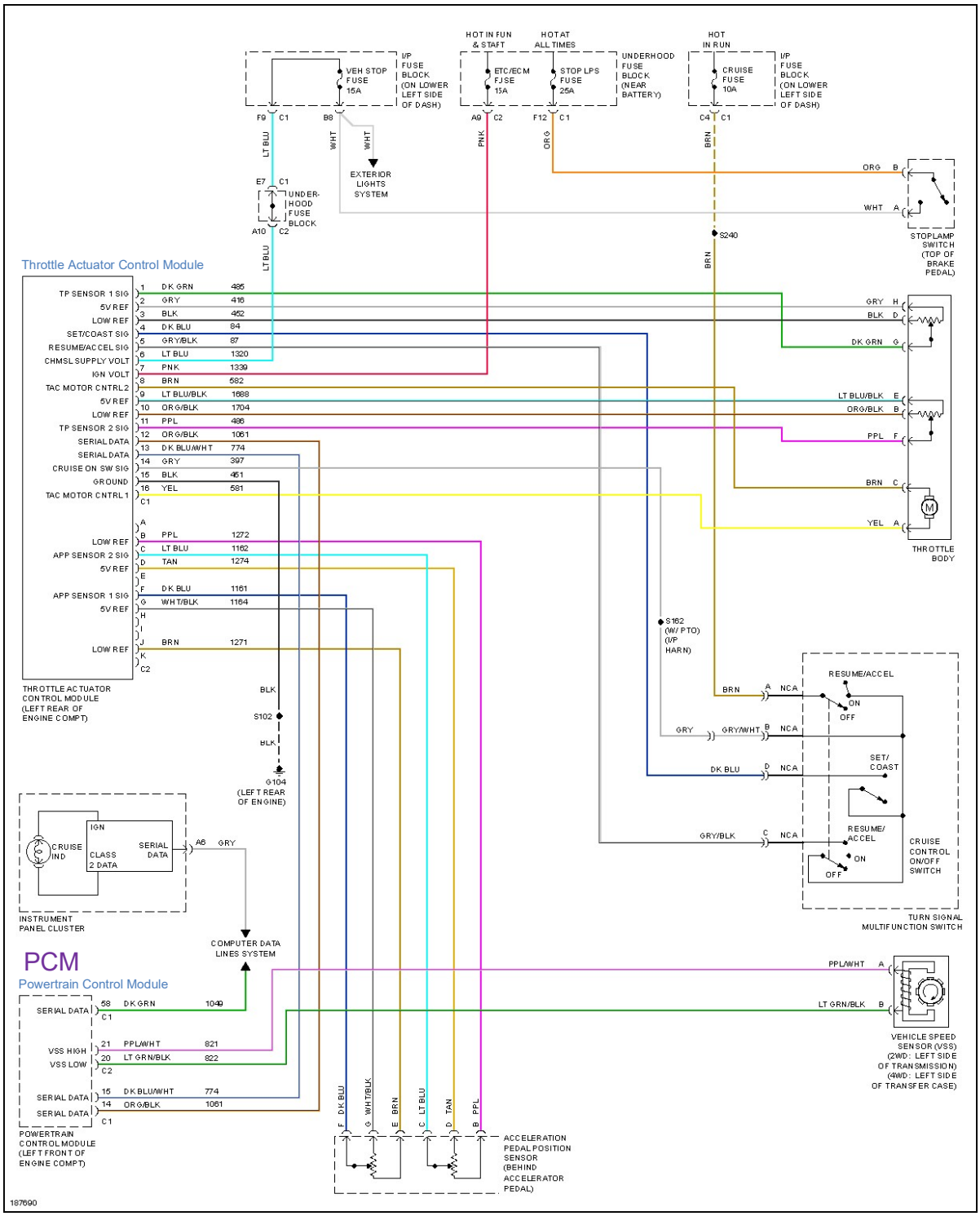
HOT IN FUN & START
HOT AT ALL TIMES
HOT IN RUN
VEH STOP FUSE 15A
I/P FUSE BLOCK (ON LOWER LEFT SIDE OF DASH)
ETC/ECM FUSE 15A
STOP LPS FUSE 25A
UNDERHOOD FUSE BLOCK (NEAR BATTERY)
CRUISE FUSE 10A
I/P FUSE BLOCK (ON LOWER LEFT SIDE OF DASH)
F9 C1
B8
A9 C2
F12 C1
C4 C1
LT BLU
WHT
WHT
PNK
ORG
BRN
EXTERIOR LIGHTS SYSTEM
E7 C1
UNDER-HOOD FUSE BLOCK
A10 C2
LT BLU
ORG B
WHT A
STOPLAMP SWITCH (TOP OF BRAKE PEDAL)
S240
BRN
Throttle Actuator Control Module
TP SENSOR 1 SIG 1 DK GRN 485
5V REF 2 GRY 416
LOW REF 3 BLK 452
SET/COAST SIG 4 DK BLU 84
RESUME/ACCEL SIG 5 GRY/BLK 87
CHMSL SUPPLY VOLT 6 LT BLU 1320
IGN VOLT 7 PNK 1339
TAC MOTOR CNTRL2 8 BRN 582
5V REF 9 LT BLU/BLK 1668
LOW REF 10 ORG/BLK 1704
TP SENSOR 2 SIG 11 PPL 486
SERIAL DATA 12 ORG/BLK 1061
SERIAL DATA 13 DK BLU/WHT 774
CRUISE ON SW SIG 14 GRY 397
GROUND 15 BLK 451
TAC MOTOR CNTRL 1 16 YEL 581
C1
LOW REF A B PPL 1272
APP SENSOR 2 SIG C LT BLU 1162
5V REF D TAN 1274
APP SENSOR 1 SIG E F DK BLU 1161
5V REF G WHT/BLK 1164
LOW REF H I J BRN 1271
K C2
THROTTLE ACTUATOR CONTROL MODULE (LEFT REAR OF ENGINE COMPT)
GRY H
BLK D
DK GRN G
LT BLU/BLK E
ORG/BLK B
PPL F
BRN C
YEL A
M
THROTTLE BODY
BLK
S102
BLK
G104 (LEFT REAR OF ENGINE)
S162 (W/ PTO) (I/P HARN)
BRN A NCA
GRY GRY/WHT B NCA
DK BLU D NCA
GRY/BLK C NCA
RESUME/ACCEL
ON
OFF
SET/ COAST
RESUME/ ACCEL
ON
OFF
CRUISE CONTROL ON/OFF SWITCH
TURN SIGNAL MULTIFUNCTION SWITCH
IGN
CRUISE IND
CLASS 2 DATA
SERIAL DATA
A6 GRY
INSTRUMENT PANEL CLUSTER
COMPUTER DATA LINES SYSTEM
PCM
Powertrain Control Module
SERIAL DATA 58 DK GRN 1049
C1
VSS HIGH 21 PPL/WHT 821
VSS LOW 20 LT GRN/BLK 822
C2
SERIAL DATA 15 DK BLU/WHT 774
SERIAL DATA 14 ORG/BLK 1061
C1
POWERTRAIN CONTROL MODULE (LEFT FRONT OF ENGINE COMPT)
PPL/WHT A
LT GRN/BLK B
VEHICLE SPEED SENSOR (VSS) (2WD: LEFT SIDE OF TRANSMISSION) (4WD: LEFT SIDE OF TRANSFER CASE)
F DK BLU
G WHT/BLK
E BRN
C LT BLU
D TAN
B PPL
ACCELERATION PEDAL POSITION SENSOR (BEHIND ACCELERATOR PEDAL)
187690

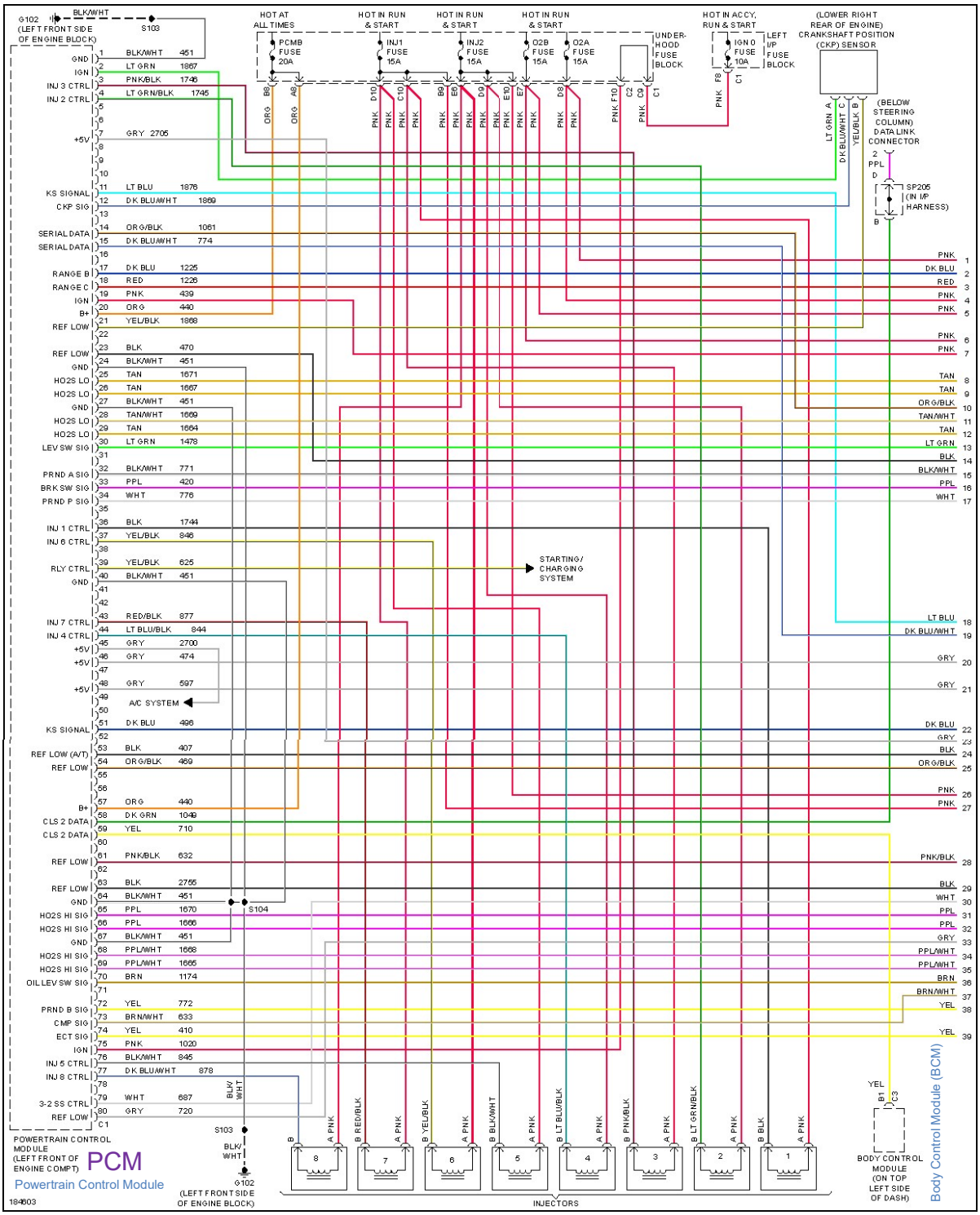
G102
(LEFT FRONT SIDE OF ENGINE BLOCK)
BLK/WHT
S103
HOT AT ALL TIMES
PCMB FUSE 20A
HOT IN RUN & START
INJ1 FUSE 15A
INJ2 FUSE 15A
O2B FUSE 15A
O2A FUSE 15A
UNDER-HOOD FUSE BLOCK
HOT IN ACCY, RUN & START
IGN 0 FUSE 10A
LEFT I/P FUSE BLOCK
(LOWER RIGHT REAR OF ENGINE)
CRANKSHAFT POSITION (CKP) SENSOR
(BELOW STEERING COLUMN) DATA LINK CONNECTOR
SP205 (IN I/P HARNESS)
GND
IGN
INJ 3 CTRL
INJ 2 CTRL
+5V
KS SIGNAL
CKP SIG
SERIAL DATA
RANGE B
RANGE C
B+
REF LOW
HO2S LO
LEV SW SIG
PRND A SIG
BRK SW SIG
PRND P SIG
INJ 1 CTRL
INJ 6 CTRL
RLY CTRL
INJ 7 CTRL
INJ 4 CTRL
A/C SYSTEM
REF LOW (A/T)
CLS 2 DATA
HO2S HI SIG
OIL LEV SW SIG
PRND B SIG
CMP SIG
ECT SIG
INJ 5 CTRL
INJ 8 CTRL
3-2 SS CTRL
STARTING/ CHARGING SYSTEM
POWERTRAIN CONTROL MODULE (LEFT FRONT OF ENGINE COMPT)
PCM
Powertrain Control Module
184803
INJECTORS
BODY CONTROL MODULE (ON TOP LEFT SIDE OF DASH)
Body Control Module (BCM)

FUEL PUMP

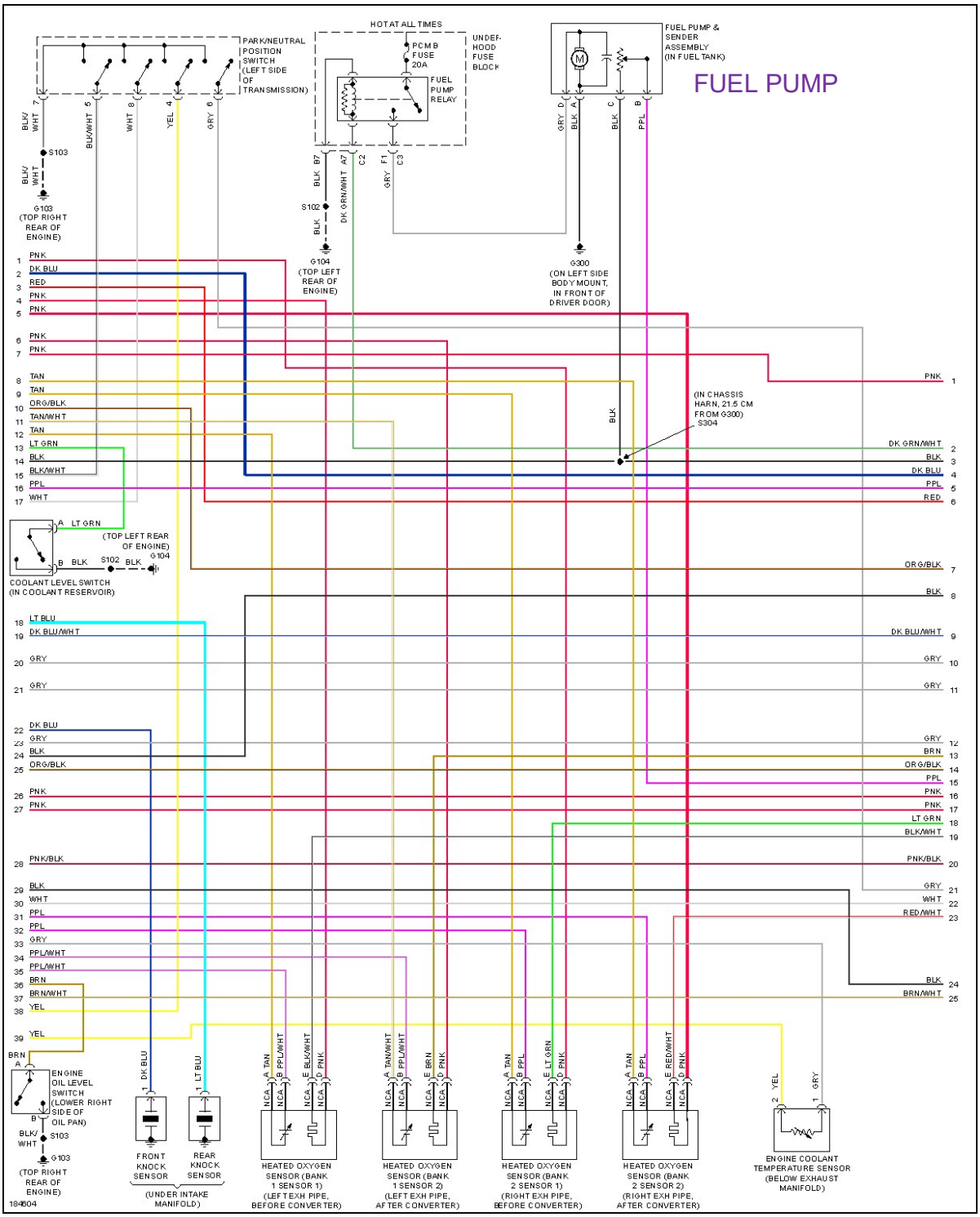
HOT AT ALL TIMES
PARK/NEUTRAL POSITION SWITCH (LEFT SIDE OF TRANSMISSION)
PCMB FUSE 20A
UNDER-HOOD FUSE BLOCK
FUEL PUMP RELAY
FUEL PUMP & SENDER ASSEMBLY (IN FUEL TANK)
G103 (TOP RIGHT REAR OF ENGINE)
G104 (TOP LEFT REAR OF ENGINE)
G300 (ON LEFT SIDE BODY MOUNT, IN FRONT OF DRIVER DOOR)
(IN CHASSIS HARN, 21.5 CM FROM G300) S304
COOLANT LEVEL SWITCH (IN COOLANT RESERVOIR)
(TOP LEFT REAR OF ENGINE) G104
ENGINE OIL LEVEL SWITCH (LOWER RIGHT SIDE OF OIL PAN)
FRONT KNOCK SENSOR
REAR KNOCK SENSOR
(UNDER INTAKE MANIFOLD)
HEATED OXYGEN SENSOR (BANK 1 SENSOR 1) (LEFT EXH PIPE, BEFORE CONVERTER)
HEATED OXYGEN SENSOR (BANK 1 SENSOR 2) (LEFT EXH PIPE, AFTER CONVERTER)
HEATED OXYGEN SENSOR (BANK 2 SENSOR 1) (RIGHT EXH PIPE, BEFORE CONVERTER)
HEATED OXYGEN SENSOR (BANK 2 SENSOR 2) (RIGHT EXH PIPE, AFTER CONVERTER)
ENGINE COOLANT TEMPERATURE SENSOR (BELOW EXHAUST MANIFOLD)
184604

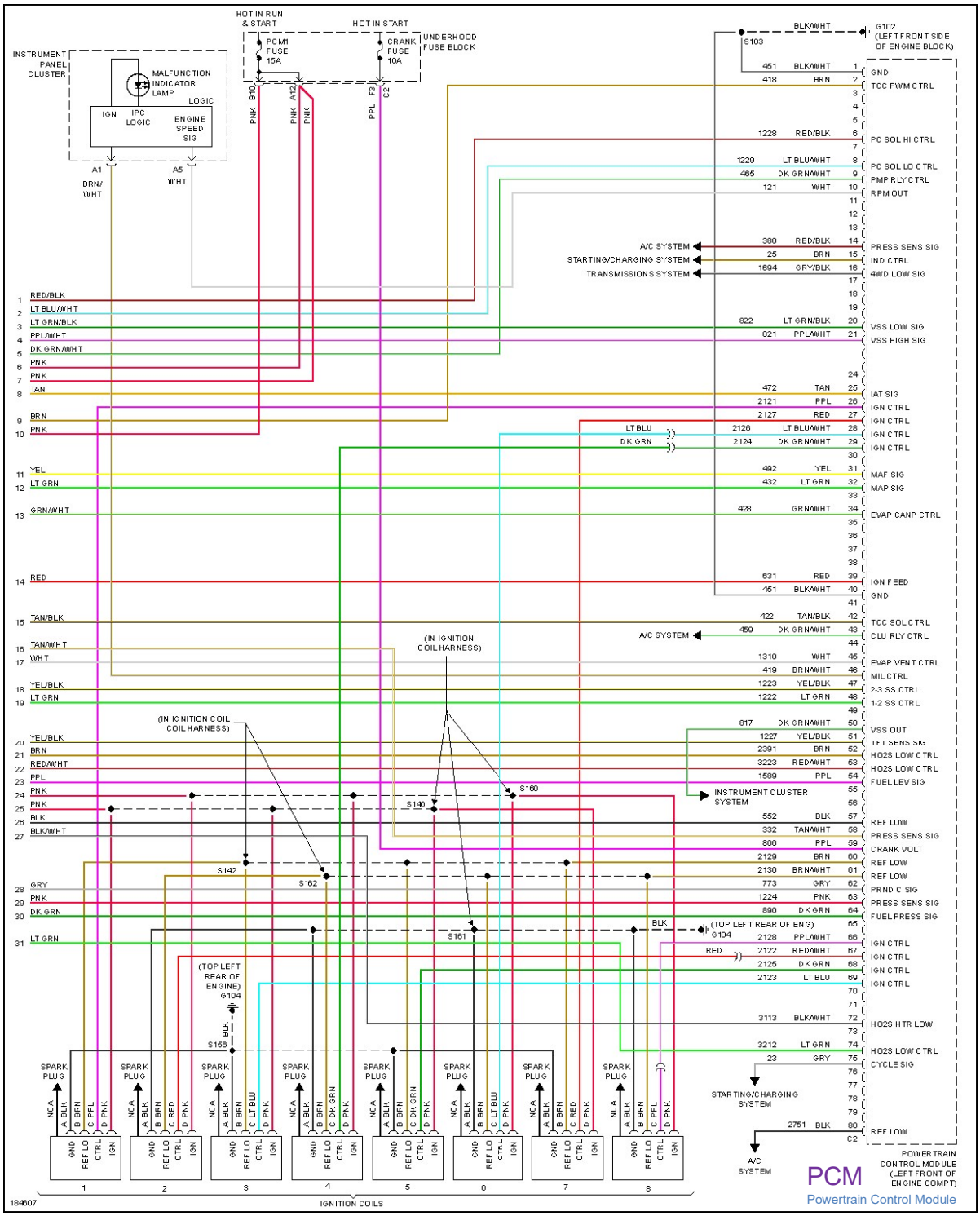
HOT IN RUN & START
HOT IN START
PCM1 FUSE 15A
CRANK FUSE 10A
UNDERHOOD FUSE BLOCK
INSTRUMENT PANEL CLUSTER
MALFUNCTION INDICATOR LAMP
LOGIC
IGN
IPC LOGIC
ENGINE SPEED SIG
A1
A5
BRN/WHT
WHT
B10
A12
F3
C2
PNK
PPL
G102 (LEFT FRONT SIDE OF ENGINE BLOCK)
S103
BLK/WHT
451 BLK/WHT 1 GND
418 BRN 2 TCC PWM CTRL
1228 RED/BLK 6 PC SOL HI CTRL
1229 LT BLU/WHT 8 PC SOL LO CTRL
465 DK GRN/WHT 9 PMP RLY CTRL
121 WHT 10 RPM OUT
380 RED/BLK 14 PRESS SENS SIG
25 BRN 15 IND CTRL
1694 GRY/BLK 16 4WD LOW SIG
A/C SYSTEM
STARTING/CHARGING SYSTEM
TRANSMISSIONS SYSTEM
822 LT GRN/BLK 20 VSS LOW SIG
821 PPL/WHT 21 VSS HIGH SIG
472 TAN 25 IAT SIG
2121 PPL 26 IGN CTRL
2127 RED 27 IGN CTRL
2126 LT BLU/WHT 28 IGN CTRL
2124 DK GRN/WHT 29 IGN CTRL
LT BLU
DK GRN
492 YEL 31 MAF SIG
432 LT GRN 32 MAP SIG
428 GRN/WHT 34 EVAP CANP CTRL
631 RED 39 IGN FEED
451 BLK/WHT 40 GND
422 TAN/BLK 42 TCC SOL CTRL
469 DK GRN/WHT 43 CLU RLY CTRL
1310 WHT 45 EVAP VENT CTRL
419 BRN/WHT 46 MIL CTRL
1223 YEL/BLK 47 2-3 SS CTRL
1222 LT GRN 48 1-2 SS CTRL
817 DK GRN/WHT 50 VSS OUT
1227 YEL/BLK 51 TFT SENS SIG
2391 BRN 52 HO2S LOW CTRL
3223 RED/WHT 53 HO2S LOW CTRL
1589 PPL 54 FUEL LEV SIG
INSTRUMENT CLUSTER SYSTEM
552 BLK 57 REF LOW
332 TAN/WHT 58 PRESS SENS SIG
806 PPL 59 CRANK VOLT
2129 BRN 60 REF LOW
2130 BRN/WHT 61 REF LOW
773 GRY 62 PRND C SIG
1224 PNK 63 PRESS SENS SIG
890 DK GRN 64 FUEL PRESS SIG
BLK
(TOP LEFT REAR OF ENG) G104
2128 PPL/WHT 66 IGN CTRL
RED
2122 RED/WHT 67 IGN CTRL
2125 DK GRN 68 IGN CTRL
2123 LT BLU 69 IGN CTRL
3113 BLK/WHT 72 HO2S HTR LOW
3212 LT GRN 74 HO2S LOW CTRL
23 GRY 75 CYCLE SIG
STARTING/CHARGING SYSTEM
2751 BLK 80 REF LOW
C2
A/C SYSTEM
POWER TRAIN CONTROL MODULE (LEFT FRONT OF ENGINE COMPT)
1 RED/BLK
2 LT BLU/WHT
3 LT GRN/BLK
4 PPL/WHT
5 DK GRN/WHT
6 PNK
7 PNK
8 TAN
9 BRN
10 PNK
11 YEL
12 LT GRN
13 GRN/WHT
14 RED
15 TAN/BLK
16 TAN/WHT
17 WHT
18 YEL/BLK
19 LT GRN
20 YEL/BLK
21 BRN
22 RED/WHT
23 PPL
24 PNK
25 PNK
26 BLK
27 BLK/WHT
28 GRY
29 PNK
30 DK GRN
31 LT GRN
(IN IGNITION COIL HARNESS)
S140
S142
S156
S160
S161
S162
(TOP LEFT REAR OF ENGINE) G104
SPARK PLUG
NCA
A BLK
B BRN
C PPL
D PNK
C RED
C LT BLU
C DK GRN
GND
REF LO
CTRL
IGN
1
2
3
4
5
6
7
8
IGNITION COILS
184607
PCM
Powertrain Control Module

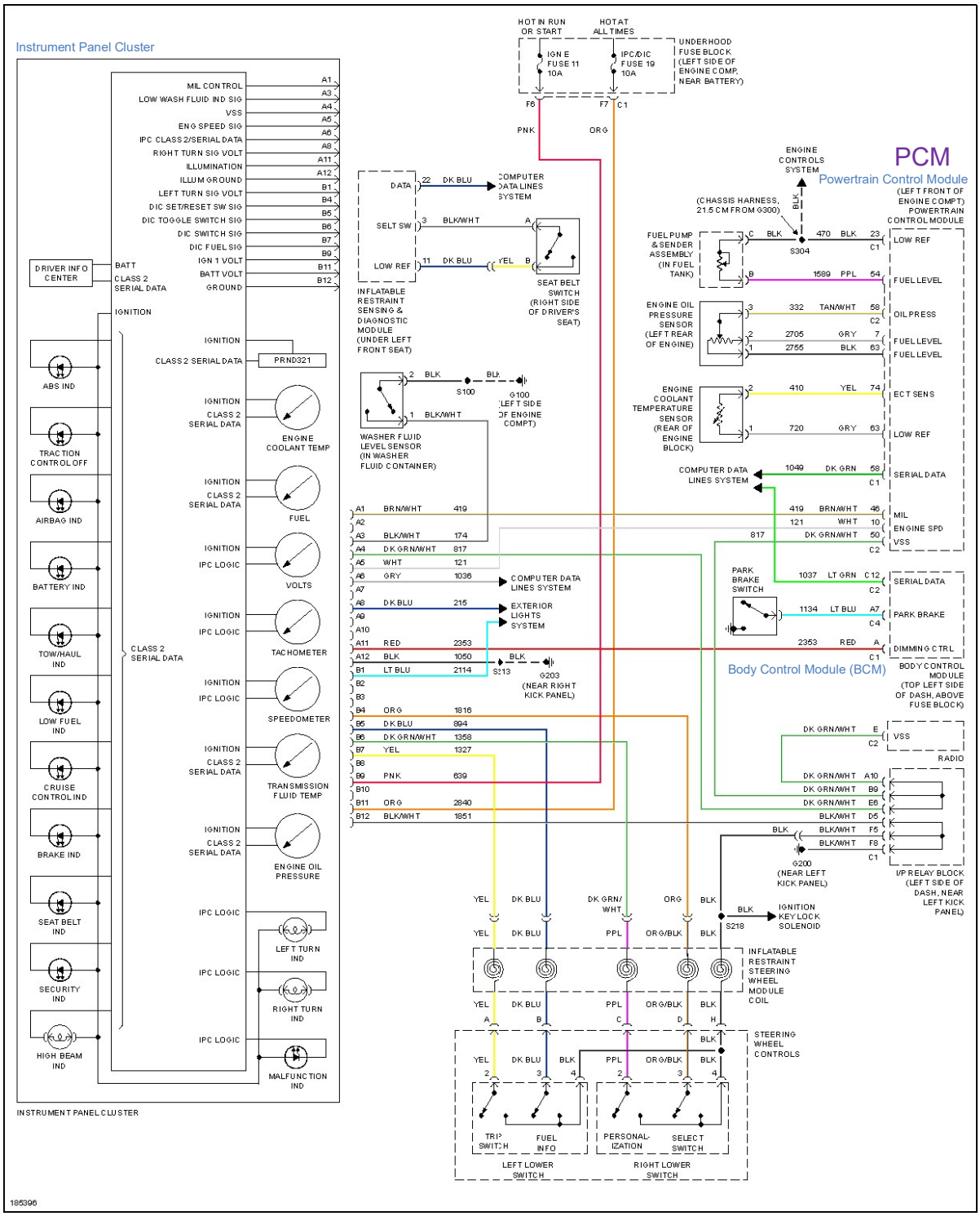
Instrument Panel Cluster
PCM
Powertrain Control Module
Body Control Module (BCM)
HOT IN RUN OR START
HOT AT ALL TIMES
IGN E FUSE 11 10A
IPC/DIC FUSE 19 10A
UNDERHOOD FUSE BLOCK (LEFT SIDE OF ENGINE COMP, NEAR BATTERY)
ENGINE CONTROLS SYSTEM
(CHASSIS HARNESS, 21.5 CM FROM G300)
FUEL PUMP & SENDER ASSEMBLY (IN FUEL TANK)
ENGINE OIL PRESSURE SENSOR (LEFT REAR OF ENGINE)
ENGINE COOLANT TEMPERATURE SENSOR (REAR OF ENGINE BLOCK)
COMPUTER DATA LINES SYSTEM
PARK BRAKE SWITCH
BODY CONTROL MODULE (TOP LEFT SIDE OF DASH, ABOVE FUSE BLOCK)
RADIO
I/P RELAY BLOCK (LEFT SIDE OF DASH, NEAR LEFT KICK PANEL)
G200 (NEAR LEFT KICK PANEL)
G203 (NEAR RIGHT KICK PANEL)
S213
S218
S304
S100
G100 (LEFT SIDE OF ENGINE COMPT)
WASHER FLUID LEVEL SENSOR (IN WASHER FLUID CONTAINER)
INFLATABLE RESTRAINT SENSING & DIAGNOSTIC MODULE (UNDER LEFT FRONT SEAT)
SEAT BELT SWITCH (RIGHT SIDE OF DRIVER'S SEAT)
DRIVER INFO CENTER
MIL CONTROL
LOW WASH FLUID IND SIG
VSS
ENG SPEED SIG
IPC CLASS 2/SERIAL DATA
RIGHT TURN SIG VOLT
ILLUMINATION
ILLUM GROUND
LEFT TURN SIG VOLT
DIC SET/RESET SW SIG
DIC TOGGLE SWITCH SIG
DIC SWITCH SIG
DIC FUEL SIG
IGN 1 VOLT
BATT VOLT
GROUND
BATT
CLASS 2 SERIAL DATA
IGNITION
PRND321
ABS IND
TRACTION CONTROL OFF
AIRBAG IND
BATTERY IND
TOW/HAUL IND
LOW FUEL IND
CRUISE CONTROL IND
BRAKE IND
SEAT BELT IND
SECURITY IND
HIGH BEAM IND
ENGINE COOLANT TEMP
FUEL
VOLTS
TACHOMETER
SPEEDOMETER
TRANSMISSION FLUID TEMP
ENGINE OIL PRESSURE
LEFT TURN IND
RIGHT TURN IND
MALFUNCTION IND
IPC LOGIC
INSTRUMENT PANEL CLUSTER
IGNITION KEY LOCK SOLENOID
INFLATABLE RESTRAINT STEERING WHEEL MODULE COIL
STEERING WHEEL CONTROLS
TRIP SWITCH
FUEL INFO
PERSONAL-IZATION
SELECT SWITCH
LEFT LOWER SWITCH
RIGHT LOWER SWITCH
185396

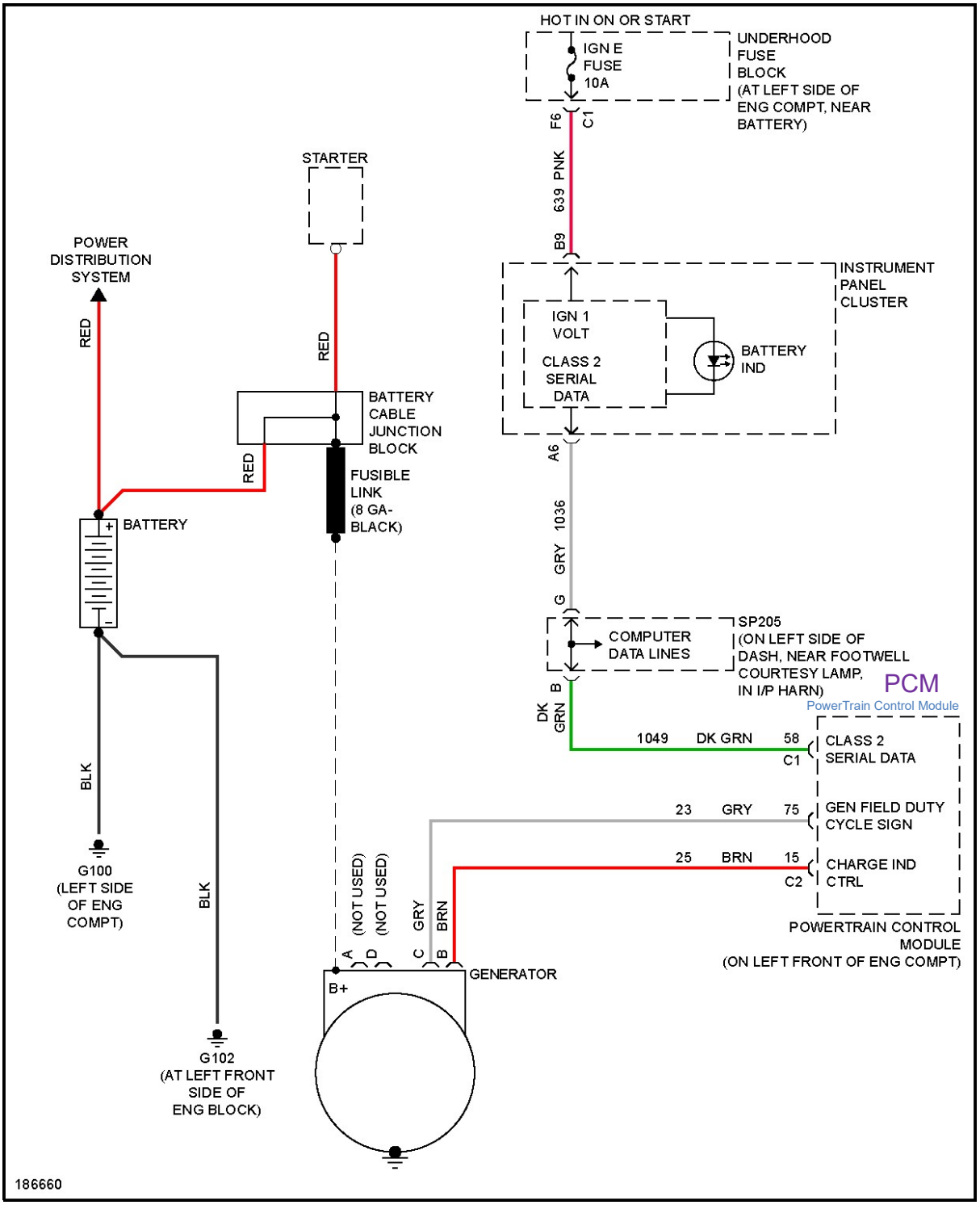
HOT IN ON OR START
IGN E
FUSE
10A
UNDERHOOD
FUSE
BLOCK
(AT LEFT SIDE OF
ENG COMPT, NEAR
BATTERY)
F6
C1
639 PNK
B9
STARTER
POWER
DISTRIBUTION
SYSTEM
RED
RED
INSTRUMENT
PANEL
CLUSTER
IGN 1
VOLT
CLASS 2
SERIAL
DATA
BATTERY
IND
BATTERY
CABLE
JUNCTION
BLOCK
RED
FUSIBLE
LINK
(8 GA-
BLACK)
A6
1036
GRY
G
BATTERY
+
-
COMPUTER
DATA LINES
SP205
(ON LEFT SIDE OF
DASH, NEAR FOOTWELL
COURTESY LAMP,
IN I/P HARN)
PCM
PowerTrain Control Module
B
DK
GRN
1049
DK GRN
58
C1
CLASS 2
SERIAL DATA
BLK
23
GRY
75
GEN FIELD DUTY
CYCLE SIGN
25
BRN
15
C2
CHARGE IND
CTRL
G100
(LEFT SIDE
OF ENG
COMPT)
BLK
(NOT USED)
(NOT USED)
GRY
BRN
A
D
C
B
POWERTRAIN CONTROL
MODULE
(ON LEFT FRONT OF ENG COMPT)
GENERATOR
B+
G102
(AT LEFT FRONT
SIDE OF
ENG BLOCK)
186660

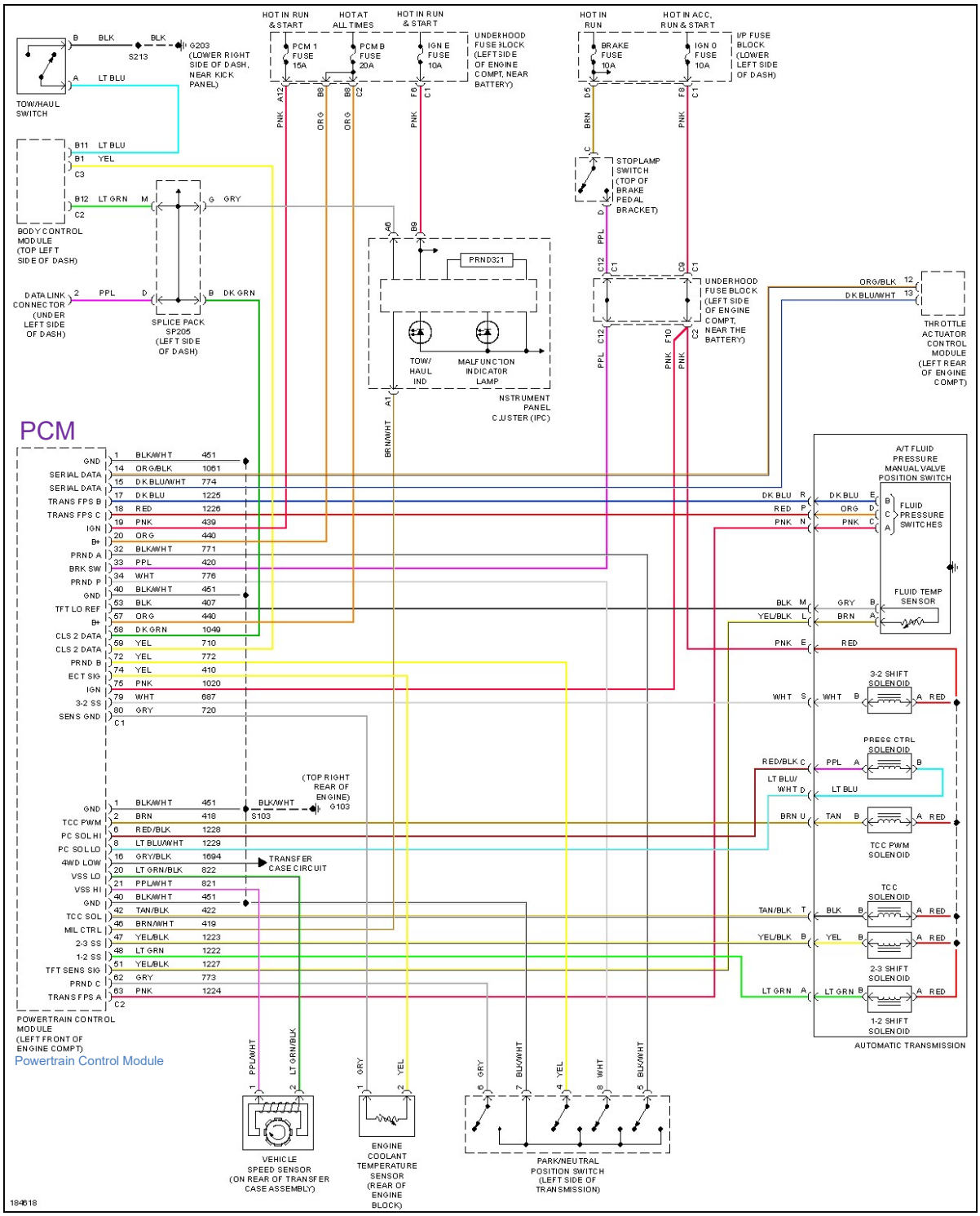
PCM
TOW/HAUL SWITCH
S213
G203 (LOWER RIGHT SIDE OF DASH, NEAR KICK PANEL)
HOT IN RUN & START
HOT AT ALL TIMES
PCM 1 FUSE 15A
PCM B FUSE 20A
IGN E FUSE 10A
UNDERHOOD FUSE BLOCK (LEFT SIDE OF ENGINE COMPT, NEAR BATTERY)
HOT IN RUN
HOT IN ACC, RUN & START
BRAKE FUSE 10A
IGN G FUSE 10A
I/P FUSE BLOCK (LOWER LEFT SIDE OF DASH)
BODY CONTROL MODULE (TOP LEFT SIDE OF DASH)
STOPLAMP SWITCH (TOP OF BRAKE PEDAL BRACKET)
DATA LINK CONNECTOR (UNDER LEFT SIDE OF DASH)
SPLICE PACK SP205 (LEFT SIDE OF DASH)
PRND321
TOW/ HAUL IND
MALFUNCTION INDICATOR LAMP
INSTRUMENT PANEL CLUSTER (IPC)
UNDERHOOD FUSE BLOCK (LEFT SIDE OF ENGINE COMPT, NEAR THE BATTERY)
THROTTLE ACTUATOR CONTROL MODULE (LEFT REAR OF ENGINE COMPT)
A/T FLUID PRESSURE MANUAL VALVE POSITION SWITCH
FLUID PRESSURE SWITCHES
FLUID TEMP SENSOR
3-2 SHIFT SOLENOID
PRESS CTRL SOLENOID
TCC PWM SOLENOID
TCC SOLENOID
2-3 SHIFT SOLENOID
1-2 SHIFT SOLENOID
AUTOMATIC TRANSMISSION
(TOP RIGHT REAR OF ENGINE) G103
TRANSFER CASE CIRCUIT
POWERTRAIN CONTROL MODULE (LEFT FRONT OF ENGINE COMPT)
Powertrain Control Module
VEHICLE SPEED SENSOR (ON REAR OF TRANSFER CASE ASSEMBLY)
ENGINE COOLANT TEMPERATURE SENSOR (REAR OF ENGINE BLOCK)
PARK/NEUTRAL POSITION SWITCH (LEFT SIDE OF TRANSMISSION)
184618