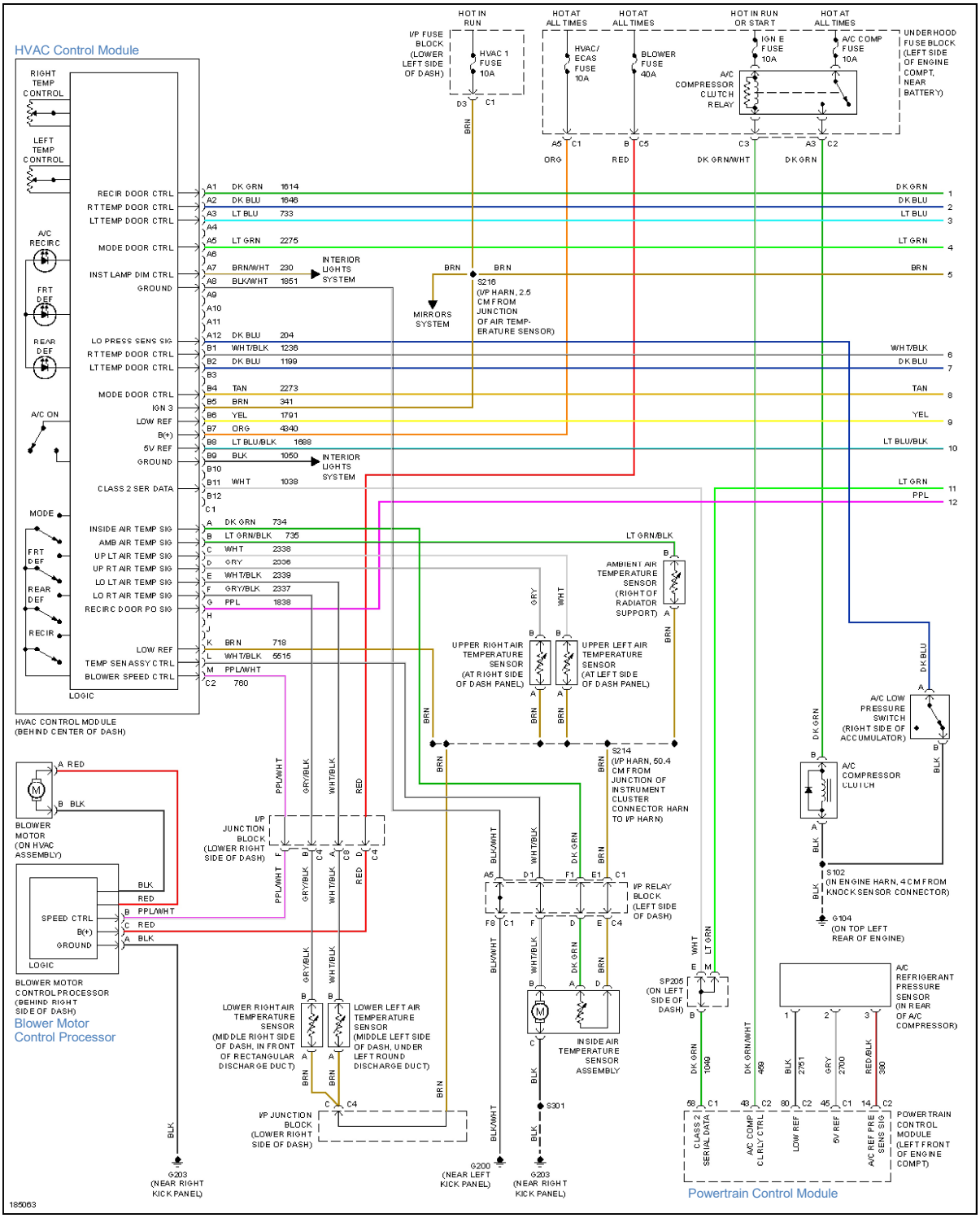
HVAC Control Module
RIGHT TEMP CONTROL
LEFT TEMP CONTROL
A/C RECIRC
FRT DEF
REAR DEF
A/C ON
MODE
FRT DEF
REAR DEF
RECIR
RECIR DOOR CTRL
RT TEMP DOOR CTRL
LT TEMP DOOR CTRL
MODE DOOR CTRL
INST LAMP DIM CTRL
GROUND
LO PRESS SENS SIG
RT TEMP DOOR CTRL
LT TEMP DOOR CTRL
MODE DOOR CTRL
IGN 3
LOW REF
B(+)
5V REF
GROUND
CLASS 2 SER DATA
INSIDE AIR TEMP SIG
AMB AIR TEMP SIG
UP LT AIR TEMP SIG
UP RT AIR TEMP SIG
LO LT AIR TEMP SIG
LO RT AIR TEMP SIG
RECIRC DOOR PO SIG
LOW REF
TEMP SEN ASSY CTRL
BLOWER SPEED CTRL
LOGIC
HVAC CONTROL MODULE (BEHIND CENTER OF DASH)
A1 DK GRN 1614
A2 DK BLU 1646
A3 LT BLU 733
A5 LT GRN 2275
A7 BRN/WHT 230
A8 BLK/WHT 1851
A12 DK BLU 204
B1 WHT/BLK 1236
B2 DK BLU 1199
B4 TAN 2273
B5 BRN 341
B6 YEL 1791
B7 ORG 4340
B8 LT BLU/BLK 1688
B9 BLK 1050
B11 WHT 1038
A DK GRN 734
B LT GRN/BLK 735
C WHT 2338
D GRY 2336
E WHT/BLK 2339
F GRY/BLK 2337
G PPL 1838
K BRN 718
L WHT/BLK 5515
M PPL/WHT
C2 760
INTERIOR LIGHTS SYSTEM
MIRRORS SYSTEM
HOT IN RUN
I/P FUSE BLOCK (LOWER LEFT SIDE OF DASH)
HVAC 1 FUSE 10A
HOT AT ALL TIMES
HVAC/ ECAS FUSE 10A
BLOWER FUSE 40A
HOT IN RUN OR START
IGN E FUSE 10A
A/C COMPRESSOR CLUTCH RELAY
A/C COMP FUSE 10A
UNDERHOOD FUSE BLOCK (LEFT SIDE OF ENGINE COMPT, NEAR BATTERY)
ORG
RED
DK GRN/WHT
DK GRN
S216 (I/P HARN, 2.5 CM FROM JUNCTION OF AIR TEMPERATURE SENSOR)
AMBIENT AIR TEMPERATURE SENSOR (RIGHT OF RADIATOR SUPPORT)
UPPER RIGHT AIR TEMPERATURE SENSOR (AT RIGHT SIDE OF DASH PANEL)
UPPER LEFT AIR TEMPERATURE SENSOR (AT LEFT SIDE OF DASH PANEL)
S214 (I/P HARN, 50.4 CM FROM JUNCTION OF INSTRUMENT CLUSTER CONNECTOR HARN TO I/P HARN)
A/C LOW PRESSURE SWITCH (RIGHT SIDE OF ACCUMULATOR)
A/C COMPRESSOR CLUTCH
S102 (IN ENGINE HARN, 4 CM FROM KNOCK SENSOR CONNECTOR)
G104 (ON TOP LEFT REAR OF ENGINE)
BLOWER MOTOR (ON HVAC ASSEMBLY)
A RED
B BLK
I/P JUNCTION BLOCK (LOWER RIGHT SIDE OF DASH)
I/P RELAY BLOCK (LEFT SIDE OF DASH)
SPEED CTRL
B(+)
GROUND
LOGIC
BLOWER MOTOR CONTROL PROCESSOR (BEHIND RIGHT SIDE OF DASH)
Blower Motor Control Processor
LOWER RIGHT AIR TEMPERATURE SENSOR (MIDDLE RIGHT SIDE OF DASH, IN FRONT OF RECTANGULAR DISCHARGE DUCT)
LOWER LEFT AIR TEMPERATURE SENSOR (MIDDLE LEFT SIDE OF DASH, UNDER LEFT ROUND DISCHARGE DUCT)
INSIDE AIR TEMPERATURE SENSOR ASSEMBLY
S301
SP205 (ON LEFT SIDE OF DASH)
A/C REFRIGERANT PRESSURE SENSOR (IN REAR OF A/C COMPRESSOR)
CLASS 2 SERIAL DATA
A/C COMP CLRLY CTRL
LOW REF
5V REF
A/C REF PRE SENS SIG
POWERTRAIN CONTROL MODULE (LEFT FRONT OF ENGINE COMPT)
Powertrain Control Module
G203 (NEAR RIGHT KICK PANEL)
G200 (NEAR LEFT KICK PANEL)
G203 (NEAR RIGHT KICK PANEL)
185063

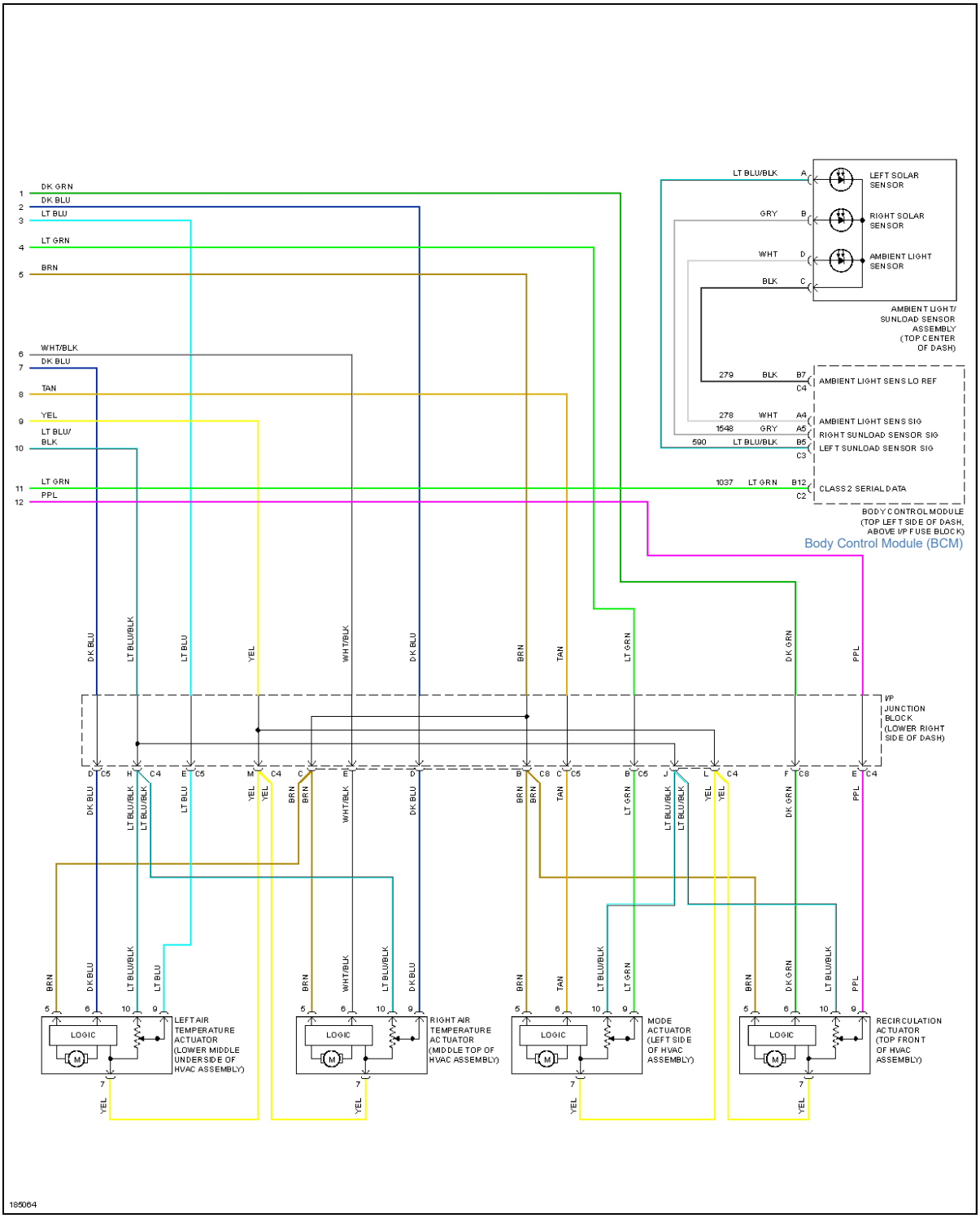
DK GRN
DK BLU
LT BLU
LT GRN
BRN
WHT/BLK
DK BLU
TAN
YEL
LT BLU/ BLK
LT GRN
PPL
LT BLU/BLK
GRY
WHT
BLK
LEFT SOLAR SENSOR
RIGHT SOLAR SENSOR
AMBIENT LIGHT SENSOR
AMBIENT LIGHT/ SUNLOAD SENSOR ASSEMBLY (TOP CENTER OF DASH)
279 BLK
AMBIENT LIGHT SENS LO REF
278 WHT
AMBIENT LIGHT SENS SIG
1548 GRY
RIGHT SUNLOAD SENSOR SIG
590 LT BLU/BLK
LEFT SUNLOAD SENSOR SIG
1037 LT GRN
CLASS 2 SERIAL DATA
BODY CONTROL MODULE (TOP LEFT SIDE OF DASH, ABOVE I/P FUSE BLOCK)
Body Control Module (BCM)
I/P JUNCTION BLOCK (LOWER RIGHT SIDE OF DASH)
LOGIC
LEFT AIR TEMPERATURE ACTUATOR (LOWER MIDDLE UNDERSIDE OF HVAC ASSEMBLY)
RIGHT AIR TEMPERATURE ACTUATOR (MIDDLE TOP OF HVAC ASSEMBLY)
MODE ACTUATOR (LEFT SIDE OF HVAC ASSEMBLY)
RECIRCULATION ACTUATOR (TOP FRONT OF HVAC ASSEMBLY)
185064