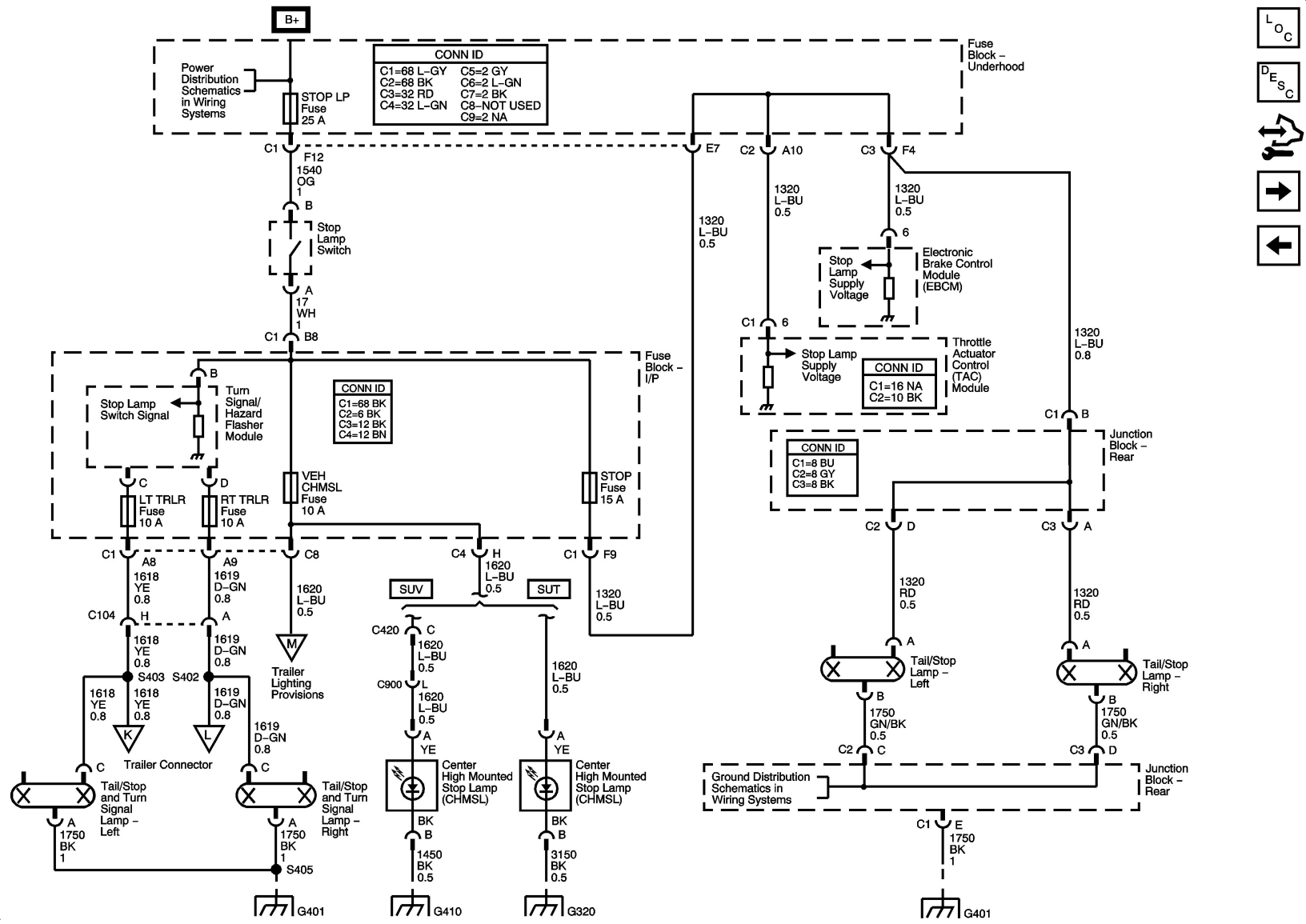
B+
Power Distribution Schematics in Wiring Systems
STOP LP Fuse 25 A
CONN ID
C1=68 L-GY C5=2 GY
C2=68 BK C6=2 L-GN
C3=32 RD C7=2 BK
C4=32 L-GN C8-NOT USED
C9=2 NA
Fuse Block - Underhood
C1 F12 1540 OG 1 B
Stop Lamp Switch
A 17 WH 1
C1 B8
E7
C2 A10
C3 F4
1320 L-BU 0.5
1320 L-BU 0.5
1320 L-BU 0.5
6
Stop Lamp Supply Voltage
Electronic Brake Control Module (EBCM)
C1 6
Stop Lamp Supply Voltage
CONN ID
C1=16 NA
C2=10 BK
Throttle Actuator Control (TAC) Module
1320 L-BU 0.8
C1 B
Fuse Block - I/P
B
Stop Lamp Switch Signal
Turn Signal/ Hazard Flasher Module
CONN ID
C1=68 BK
C2=6 BK
C3=12 BK
C4=12 BN
C D
LT TRLR Fuse 10 A
RT TRLR Fuse 10 A
VEH CHMSL Fuse 10 A
STOP Fuse 15 A
CONN ID
C1=8 BU
C2=8 GY
C3=8 BK
Junction Block - Rear
C2 D
C3 A
C1 A8 1618 YE 0.8
A9 1619 D-GN 0.8
C8 1620 L-BU 0.5
C4 H 1620 L-BU 0.5
C1 F9 1320 L-BU 0.5
SUV
SUT
1320 RD 0.5
1320 RD 0.5
C104 H
A
C420 C 1620 L-BU 0.5
C900 L 1620 L-BU 0.5
1620 L-BU 0.5
A
Tail/Stop Lamp - Left
Tail/Stop Lamp - Right
1618 YE 0.8
1619 D-GN 0.8
S403 S402
1618 YE 0.8
1618 YE 0.8
1619 D-GN 0.8
1619 D-GN 0.8
M
Trailer Lighting Provisions
K
L
Trailer Connector
A YE
A YE
Center High Mounted Stop Lamp (CHMSL)
Center High Mounted Stop Lamp (CHMSL)
B 1750 GN/BK 0.5
B 1750 GN/BK 0.5
C2 C
C3 D
Ground Distribution Schematics in Wiring Systems
Junction Block - Rear
C
Tail/Stop and Turn Signal Lamp - Left
C
Tail/Stop and Turn Signal Lamp - Right
BK B
BK B
A 1750 BK 1
A 1750 BK 1
S405
1450 BK 0.5
3150 BK 0.5
C1 E 1750 BK 1
G401
G410
G320
G401

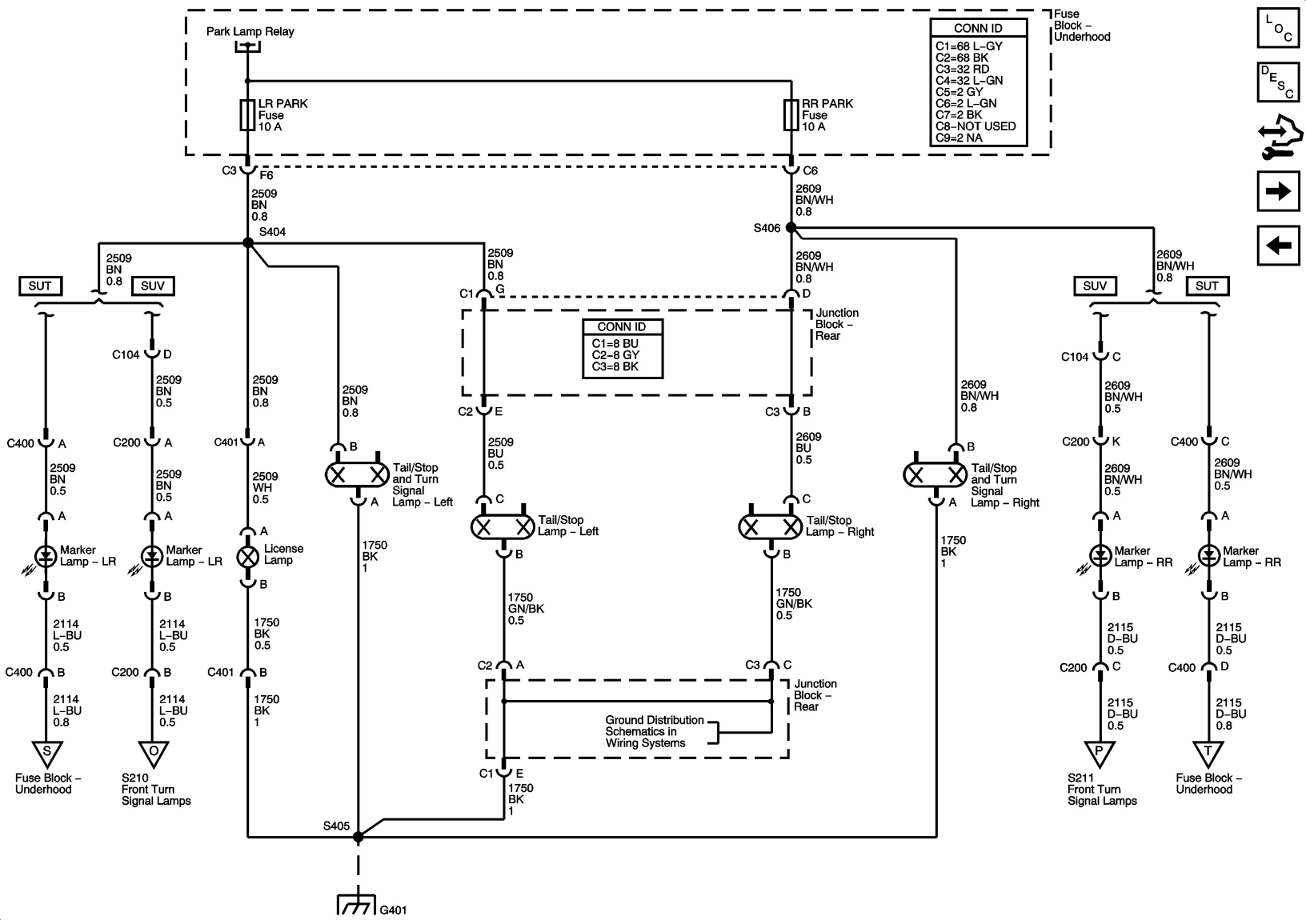
Park Lamp Relay
LR PARK Fuse 10 A
RR PARK Fuse 10 A
Fuse Block – Underhood
CONN ID
C1=68 L–GY
C2=68 BK
C3=32 RD
C4=32 L–GN
C5=2 GY
C6=2 L–GN
C7=2 BK
C8–NOT USED
C9=2 NA
C3 F6
2509 BN 0.8
S404
C6
2609 BN/WH 0.8
S406
SUT
SUV
C104 D
2509 BN 0.5
C400 A
C200 A
C401 A
2509 WH 0.5
Marker Lamp – LR
License Lamp
2114 L–BU 0.5
1750 BK 0.5
C400 B
C200 B
C401 B
2114 L–BU 0.8
1750 BK 1
Fuse Block – Underhood
S210 Front Turn Signal Lamps
B
Tail/Stop and Turn Signal Lamp – Left
A
1750 BK 1
S405
G401
C1 G
C2 E
2509 BU 0.5
C
Tail/Stop Lamp – Left
B
1750 GN/BK 0.5
C2 A
C1 E
1750 BK 1
CONN ID
C1=8 BU
C2–8 GY
C3=8 BK
Junction Block – Rear
D
C3 B
2609 BU 0.5
Tail/Stop Lamp – Right
Ground Distribution Schematics in Wiring Systems
C3 C
Tail/Stop and Turn Signal Lamp – Right
C104 C
2609 BN/WH 0.5
C200 K
C400 C
Marker Lamp – RR
2115 D–BU 0.5
C200 C
C400 D
2115 D–BU 0.8
S211 Front Turn Signal Lamps
Fuse Block – Underhood