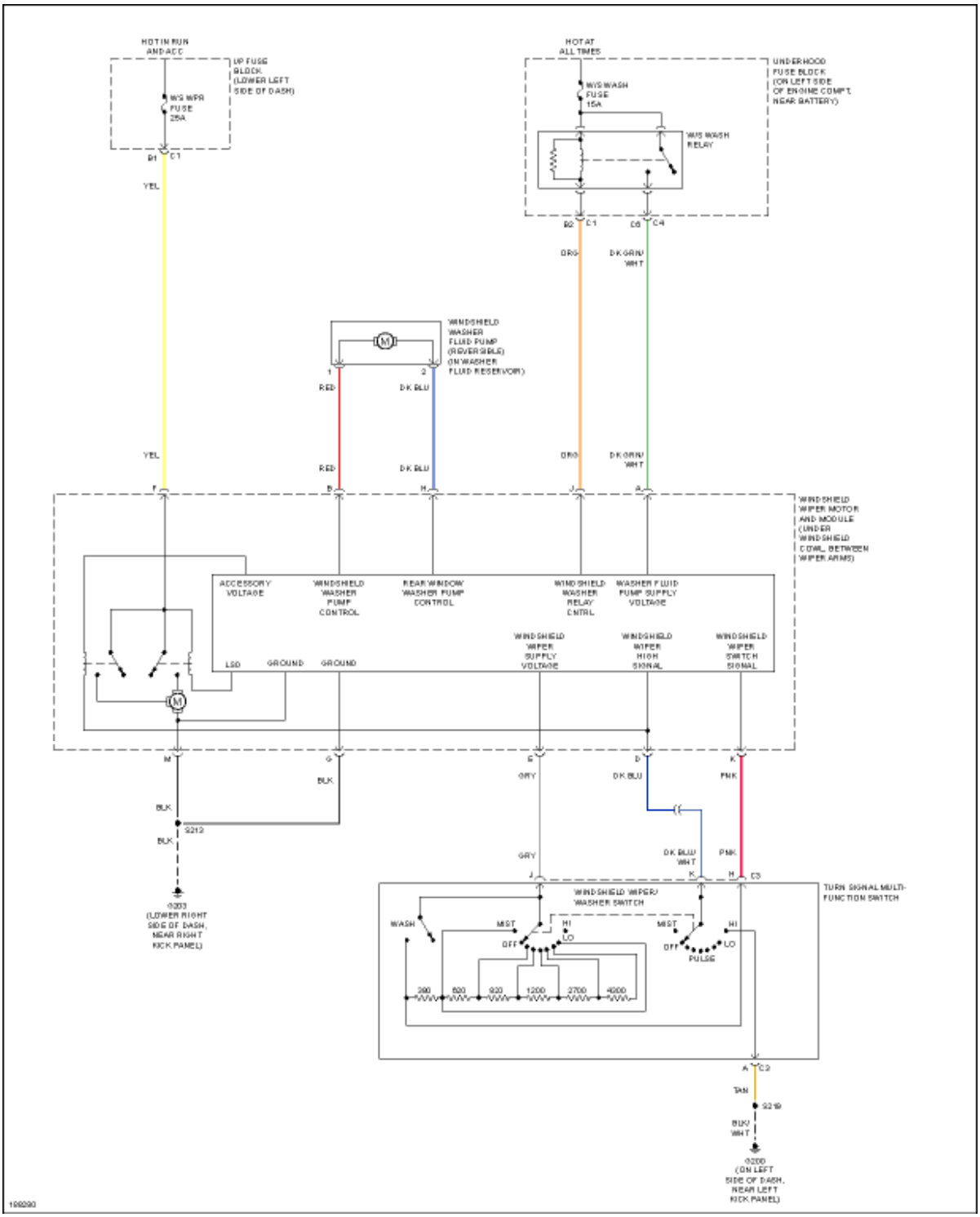
HOT IN RUN AND ACC
UP FUSE BLOCK (LOWER LEFT SIDE OF DASH)
WS WPR FUSE 25A
B1
C1
YEL
HOT AT ALL TIMES
UNDERHOOD FUSE BLOCK (ON LEFT SIDE OF ENGINE COMPT. NEAR BATTERY)
WS WASH FUSE 15A
WS WASH RELAY
B2
C1
C3
C4
ORG
DK GRN/ WHT
WINDSHIELD WASHER FLUID PUMP (REVERSIBLE) (IN WASHER FLUID RESERVOIR)
1
2
RED
DK BLU
YEL
RED
DK BLU
ORG
DK GRN/ WHT
F
B
H
J
A
WINDSHIELD WIPER MOTOR AND MODULE (UNDER WINDSHIELD COWL, BETWEEN WIPER ARMS)
ACCESSORY VOLTAGE
WINDSHIELD WASHER PUMP CONTROL
REAR WINDOW WASHER PUMP CONTROL
WINDSHIELD WASHER RELAY CNTRL
WASHER FLUID PUMP SUPPLY VOLTAGE
WINDSHIELD WIPER SUPPLY VOLTAGE
WINDSHIELD WIPER HIGH SIGNAL
WINDSHIELD WIPER SWITCH SIGNAL
LSD
GROUND
GROUND
M
G
E
D
K
BLK
GRY
DK BLU
PNK
BLK
S212
BLK
G203 (LOWER RIGHT SIDE OF DASH, NEAR RIGHT KICK PANEL)
GRY
DK BLU/ WHT
PNK
J
K
H
C3
TURN SIGNAL MULTI-FUNCTION SWITCH
WINDSHIELD WIPER/ WASHER SWITCH
WASH
MIST
OFF
HI
LO
MIST
OFF
HI
LO
PULSE
280
620
920
1200
2700
4000
A
C2
TAN
S219
BLK/ WHT
G200 (ON LEFT SIDE OF DASH, NEAR LEFT KICK PANEL)
199290